STAFF REPORT

DATE: 7/18/2017
REGULAR
ITEM #: 20
MOTION

TO: City Council

FROM: Emily Becker, City Planner

AGENDA ITEM: Easton Village 3rd Addition Final Plat

REVIEWED BY: Stephen Wensman, Planning Director
Jack Griffin, City Engineer

BACKGROUND:

The Council is being asked to consider a Final Plat request from Chase Development for the 3rd Addition of Easton Village, a planned 217 unit residential development. The 3rd Addition includes 28 single family lots that are located within an 8.53 acre area to the north of the western portion of Easton Village 1st Addition. Staff and the Planning Commission are recommending approval of the request subject to compliance with the conditions listed in this report.

ISSUE BEFORE COUNCIL:

The Council is being asked to review the Final Plat request for the 3rd Addition of Easton Village based on its consistency with the approved Preliminary Plat (revised on 6/21/2017).

PROPOSAL DETAILS/ANALYSIS:

General Information.

Applicant: Chase Development, 2140 West County Road 42, Burnsville, MN

Property Owners: Easton Village, LLC (Tom Wolter) 2140 West County Road 42, Burnsville, MN

Location: Section 12 & 13, Township 29 North, Range 21 West in Lake Elmo, north of 30th Street, west of Manning Avenue, and south of the Union Pacific railroad right-of-way. PID Number 13.029.21.42.0025.

Request: Application for final plat approval of a 28 unit residential subdivision to be named Easton Village 3rd Addition.

Zoning: LDR – Low Density Residential

Surrounding: North – vacant/agricultural land (RT – Rural Transitional); West – single family home, City park, natural vegetation (PF – Public and Quasi Public Open Space; South – vacant land (LDR – Low Density Residential); East – Lake Elmo Airport (Baytown Township).

Comp. Plan: Village Urban Low Density Residential (1.5 - 2.49 units per acre)

History: Property was included in Village Planning Area boundary and municipal sewer service area as defined in the 2013 Village Land Use Plan. Site has historically been used for faming activities, including the growing of agricultural crops. Sketch Plan review by Planning Commission on 1/27/14 with Preliminary Plat approval on July 15, 2014. 1st An AUAR for the Village Planning area was approved by the City in May of 2009. 1st Addition approval on March 3, 2015, and 2nd Addition approval on May 2, 2017. Preliminary Plat revised on 6/21/2017.

Action Deadline: Application Complete – 6/21/2017
60 Day Deadline – 8/20/2017
Extension Letter Mailed – No
120 Day Deadline –

Regulations: Chapter 153 – Subdivision Regulations
Article 10 – Urban Residential Districts (LDR)
§150.270 Storm Water, Erosion, and Sediment Control

Consistency with Preliminary Plat.

Revised Preliminary Plat. Prior to the 1st Addition Final Plat approval, the approved Preliminary Plat was revised in December of 2014 to address the following:

- The need to reconfigure the temporary access into the subdivision.
- Revisions to the grading plan.
- Adjustments to the property boundaries adjacent to the gas line that bisects the site.
- The provision of a slightly larger buffer from the railroad tracks.
- Revisions to the storm water management plan.

With the 2nd Addition, the developer again revised the preliminary plat. A condition of 2nd Addition approval was that the revised Preliminary Plat and Plans be approved prior to submittal of accepting the 3rd Addition.

Increased Number of Lots.

- The proposed 3rd Addition Final Plat increased the number of lots from 27 to 28, consistent with the revised Preliminary Plat.
- # of lots in area proposed as 3rd Addition in approved and revised Preliminary Plat: 27
- # of lots in proposed 3rd Addition Final Plat: 28

Decreased Lot Sizes.

The table below shows the lot sizes in the area proposed as 2nd Addition in the revised Preliminary Plat as compared to the proposed 2nd Addition Final Plat:

Lot	Block	December 2014 Preliminary Plat	Final Plat/Revised Preliminary Plat
1	1	10,394	11,194
2	1	10,425	11,167
3	1	11,294	10,935

1	2	12,920	16,641
2	2	12,121	8,140
3	2	8,463	9,405
4	2	8,670	8,522
5	2	8,833	8,555
6	2	8,809	8,483
7	2	8,988	8,836
8	2	9,808	10,237
9	2	12,257	12,143
10	2	--- (not on preliminary plat)	11,958
1	3	12,324	14,294
2	3	11,400	9,217
3	3	8,450	9,231
4	3	8,234	9,124
5	3	8,968	8,450
6	3	9,273	9,100
7	3	9,292	8,724
8	3	9,705	8,138
9	3	9,595	9,777
10	3	11,340	10,307
11	3	11,452	12,769
12	3	18,433	15,491
13	3	14,261	12,330
14	3	11,728	9,519
15	3	11,259	8,650

Outlots. Outlot A, proposed as open space for landscaping, to be owned and maintained by the Homeowners Association, is 0.111 acres. Outlot B, which is the trail corridor, is 0.091 acres.

Final Area of Dedicated (Non-Arterial) Right-of-Way: 1.684 acres

Outlot F Replatted. The Applicant has replatted Outlot F in to separate outlots. The outlots indicate phasing for the rest of the development. Outlots I and J will be dedicated to the City with the 3rd Addition, for stormwater management purposes and parkland. The dedication of part of these outlots as parkland will satisfy the remaining parkland dedication requirements for the entire development.

Engineering Comments. The City Engineer has reviewed the Final Plat, and these comments can be reviewed in the attached Easton Village 3rd Addition Final Plat Engineering comments review memo dated May 25, 2017. Outlined comments include the following:

- Payment for pipe over-sizing from the City standard 8-inch pipe should be addressed as part of the developer agreement.
- There are a number of comments outlined in the Construction Plans and Specifications memo provided by the City Engineer that must be addressed and approved prior to recording of the Final Plat.

Easement Vacation. 3rd Addition plats a portion of Outlot F of Easton Village 2nd Addition. This Outlot has three easements recorded against it, a permanent easement for drainage and utility purposes, and a temporary access easement which terminates upon replatting of Outlot F and a temporary construction easement which terminates after a one year warranty period after completion of installing the public and utility and drainageway. None of these should cause an issue for platting.

Temporary Cul-de-Sac and Road Connection. The Applicant has proposed a temporary cul-de-sac off of Lilac Avenue North and a temporary road connection connecting Village Parkway to 33rd Street North. Temporary Road Easements will need to be provided.

"Eyebrows" Removed. The original Preliminary Plat was shown with 33rd Street North as having 'eyebrows' as it moves north-south. The Applicant has removed these, in order to (as communicated to Staff during conversations with the Developer) provide a better design and decrease the amount of maintenance. The updated Preliminary Plat reflects this change, and the Final Plat is consistent with the revised Preliminary Plat. Staff has reviewed this change and has not seen an issue in this.

Outlot Added. An additional outlot was added, consistent with the revised Preliminary Plat. The Applicant has communicated that this is proposed as open space to be used for plantings. Staff does not see an issue with the addition of this outlot as long as the maintenance and responsibility for this outlot is clearly outlined in the Landscape License Agreement as the responsibility of the Homeowners' Association.

Parkland.

- The approved Preliminary Plat shows a trail connection between Lot 29 of Block 8 (shown on the Final Plat as Lot 14 Block 3) and Lot 1 of Block 10 (shown on the Final Plat as Lot 13 of Block 3). This trail outlot is 0.091 acres.
- The proposed Final Plat shows this trail connection moved to be above Lot 15 Block 3.
- Staff does not see an issue with this adjustment as the trail connection in Preliminary Plans does not directly connect to a trail across Village Parkway.
- This trail is proposed to go through a Drainage and Utility easement and has been reviewed by the Engineer.
- The approved Developer Agreement for Easton Village 1st Addition states that the developer shall be required to dedicate 9.84 acres of land for public park purposes for the entire subdivision. The 1st Addition dedicated 3.99 acres of parkland, and future project phases are to either dedicate the remaining 5.85 acres of park land or cash payment in lieu of dedication. The Easton Village 2nd Addition Developer Agreement required a security in the form of a Letter of Credit in the amount of the fee in lieu of park dedication for the acreage of that addition. This Letter of Credit will be released with the dedication of the 3rd Addition, as (as previously mentioned), Outlot F has been replatted in to a number of different outlots, and Outlots I and J will be dedicated to the City. The developer will receive parkland dedication for parts of these outlots, and so the parkland dedication requirement for the entire development will be satisfied.

Landscape Plans.

- The Applicant submitted updated Preliminary Landscape Plans with application for 1st Addition Final Plat, dated 12/17/2014 in response to comments provided by the City's Landscape Architect in a review letter dated 12/3/2014.
- The 3rd Addition Final Plat Landscape Plans are generally consistent with the Preliminary Landscape Plans in the following ways:
    - Autumn Blaze Maple are proposed where Common Hackberry was approved surrounding the trail.
    - Red Maple is proposed on the left side of Lilac Avenue North where Autumn Blaze Maple was approved.
    - Accolade Elm, Hackberry and White Oak are proposed where Redmond Linden and Red Maple were approved on 33rd Street N.
- The Landscape Plan does not include utility locations. The Plans will need to be updated to include this.

Street Naming. There are no other streets in the City with the name Lilac Avenue, and so this street name is consistent with the City's Street Naming Policy. There is, however, another 33rd Street North within the City. While this name is not consistent with the City's Street Naming Policy in that the Policy states that unless a newly proposed street directly extends from an existing street, no street name that already exists in the city or its environs shall be used, regardless if it is on the same grid as another street. However, it should be noted that the street directly to the south of the street that is proposed to be named 33rd Street North has already been platted and named as 32nd Street North. There also exist other streets within the City that are also named 32nd Street North outside of this development. Because of this, it may make sense to allow the proposed name for this street.

Final Plat Approval Process. The City's subdivision ordinance establishes the procedure for obtaining final subdivision approval, in which case a final plat may only be reviewed after the City takes action on a preliminary plat. As long as the final plat is consistent with the preliminary approval, it must be approved by the City. Please note that the City's approval of the Easton Village Preliminary Plat did include a series of conditions that must be met by the applicant, which are addressed in the "Review and Analysis" section below. There are no public hearing requirements for a final plat.

In order to provide the Planning Commission with an update concerning the conditions associated with the preliminary plat for Easton Village, Staff has prepared the following:

Preliminary Plat Conditions – With Staff Update Comments (updated information in bold italics):

1) Within six months of preliminary plat approval, the applicant shall complete the following: a) the applicant shall provide adequate title evidence satisfactory to the City Attorney; and b) the applicant shall pay all fees associated with the preliminary plat. The above conditions shall be met prior to the City accepting an application for final plat and prior to the commencement of any grading activity on the site. ***Comments: a) All title work was submitted and reviewed by the City Attorney before City officials prior to recording of the 1st phase Final Plat and will continue to be checked prior to recording of subsequent phases. b) The applicant has submitted an escrow payment with Final Plat application that is being used to cover Staff and consultant expenses related to the City's review.***

2) The grading plan shall be updated to include the protective tree fencing necessary to preserve all vegetative areas identified for protection around the 5.15 acre residential parcel to the west of the subdivision. ***Comments: The grading plan was updated accordingly. All disturbed areas are shown on the plan, and the applicant will need to replace disturbed trees in accordance with the City's tree replacement schedule. There is no tree protection or removal in the 3rd Addition.***

3) The applicant shall work with the City and Washington County to identify and reserve sufficient space for a future trail corridor along the western right-of-way line of Manning Avenue. ***Comments: The proposed Manning Avenue right-of-way is consistent with County requirements, as the planned roadway segment includes room for trails on one or both sides of the right-of-way. The County's future plans for Manning Avenue include a trail along the western side of this road.***

4) The applicant shall submit a landscape plan prepared by landscape architect for review and approval by the City. The landscape plan submittal will include a tree protection and replacement plan consistent with City ordinances. ***Comments: The applicant submitted updated Preliminary Landscape Plans dated 12/17/2014 with the application for 1st Addition Final Plat. Revised landscape plans were submitted with the 2017 Preliminary Plat revisions. The Applicant will need to address comments outlined in this report and obtain approval prior to recording of the 3rd Addition Final Plat.***

5) The final plat will incorporate all review comments from the City's landscape architect, including the selection and mix of plantings within storm water basins and infiltration areas. ***Comments: Please see above condition.***

6) The landscape plan shall include additional plantings around the Northern Natural Gas utility site. ***Comments: The submitted Final Plat Landscape Plans are generally consistent with approved Preliminary Landscape Plans in this easement area.***

7) The proposed access to Manning Avenue will be permitted as a temporary access until such time that the Village Parkway is connected to 30th Street. The construction plans will be updated to reflect the temporary nature of this street. ***Comments: The applicant asked during the 1st Addition Final Plat that this provision be updated to state that the temporary access will be allowed for a minimum of five years. Staff was supportive of this revision and has updated the proposed conditions the 1st Addition Final Plat approval to reflect the change. This condition is not relevant to the 3rd Addition Final Plat.***

8) The applicant shall be responsible for the construction of all improvements within the Manning Avenue (CSAH 15) right-of-way as required by Washington County and further described in the review letter received from the County dated June 24, 2014. ***The final construction plans for the 1st Addition were updated to incorporate the required improvements to Manning Avenue. This condition is not relevant to the 3rd Addition final plat.***

9) The developer shall follow all of the rules and regulations spelled out in the Wetland Conservation Act, and shall acquire the needed permits from the appropriate watershed districts for the storm water management system prior to the commencement of any grading or development activity on the site. ***Comments: The Applicant has been granted a Valley Branch Watershed District permit.***

10) The applicant shall enter into a maintenance agreement with the City that clarifies the individuals or entities responsible for any landscaping installed in areas outside of land dedicated as public park and open space on the final plat. ***Comment: A Landscape License Agreement was executed for the 1st Addition and will be for the 2nd and 3rd Additions.***

11) The developer shall provide an updated accounting of the land to be dedicated for park purposes prior to submission of a final plat. If required, the developer shall be required to pay a fee in lieu of park land dedication equivalent to the fair market value for the amount of land that is required to be dedicated for such purposes in the City's Subdivision Ordinance less the amount of land that is accepted for park purposes by the City. Any cash payment in lieu of land dedication shall be paid by the applicant prior to the release of the final plat for recording. ***Comments: The park dedication requirements for the entire Easton Village development is 9.84 acres of land, representing 10% of the development area. During the 1st Addition Final Plat, the applicant provided an accounting of the land to be dedicated for park purposes, stating that the entire development will provide 7.29 acres of public park land. Staff had reviewed these numbers with the 1st Addition Final Plat application and found them to be accurate. The final agreement with the City concerning either a cash payment for the park land shortfall or future land dedication should be addressed in the developer's agreement for Easton Village 3rd Addition.***

12) Any land under which public trails are located will be accepted as park land provided the developer constructs said trails as part of the public improvements for the subdivision. ***Comments: The Applicant will receive parkland dedication credit for the 0.091 acre Outlot B.***

13) All required modifications to the plans as requested by the City Engineer in a review letter dated June 26, 2014 shall be incorporated into the plans prior to consideration of a final plat. ***Comments. The preliminary plat and plans have been updated to address the City Engineer's review comments and were approved on June 21, 2017.***

14) The City and developer will determine the appropriate distribution of future costs associated with the Village Parkway railroad crossing improvements as part of a developer's agreement for any portion of Easton Village. ***Comments: Staff will be drafting a developer's agreement for consideration by the Council that will incorporate a section dealing with this provision.***

15) The developer shall address any comments from Metropolitan Airport Commission as part of a final plat submission for any portion of Easton Village. MAC will be asked to comment on the landscape plan, and the plan shall be revised to address any specific comments concerning the appropriate vegetation to be planted within storm water facilities. ***Comments: MAC has provided a review of the updated plans and provided comments to the developer in a letter dated December 8, 2015. This letter contains recommended mitigation strategies to reduce the attractiveness of the storm water retention and infiltration areas for waterfowl. Other recommendations from MAC have been incorporated into the applicant's landscape plans. Mac's comments about noise mitigation and notification about the airport are relevant to the 3rd Addition Final Plat.***

16) The landscape plan shall be revised to eliminate all trees planted within the Lake Elmo Airport Regulatory Protection Zone. ***Comments. The Preliminary and 1st Addition landscape plans***

have been updated accordingly. MAC's comments are not relevant to the 3rd Addition Final Plat.

17) The final plat shall include a paved trail connection between Lots 13 and 14 of Block 3. ***Comments: This condition is not relevant to the 3rd Addition Final Plat. This trail was removed with 2nd Addition approval.***

18) The applicant shall submit written acknowledgement from the property owner of the parcel immediately to the south of Easton Village concerning the storm water being outlet running into their property. ***Comments: Since the approval of the preliminary plat, the applicant has met with the watershed district, county, and Gonyea Homes to discuss the proposed storm water management system along Manning Avenue. This condition is not relevant to the 3rd Addition Final Plat.***

19) The applicant is encouraged to incorporate elements from the Lake Elmo Theming Study into the open space areas within the subdivision. ***Comments: This was Staff recommendation at the time of Preliminary Plat to encourage the applicant to utilize a white "horse fence" with landscaping in order to address the comments from MAC to provide a barrier around the storm water ponds. This fence was not erected, but instead additional landscaping was installed to provide screening. The applicant's landscape plan for the 1st Addition incorporated elements from the theming study, including the proposed entrance monument sign. This condition is not relevant to the 3rd Addition Final Plat.***

20) The developer shall obtain all required permits from Northern Natural Gas to perform construction work over the gas line that runs from north to south across this site. ***Comments. Northern Natural Gas provided review comments to the developer in has submitted final construction plans to the gas company for review, and will need to abide by any conditions imposed by Northern Natural Gas.***

21) The developer shall be required to extend sewer to the northernmost boundary of the site. ***Comments. The Easton Village Trunk Sewer Line project has been completed and has extended sanitary sewer service to the northern boundary of the plat, connecting to the sewer line recently installed by the City of Lake Elmo under the railroad tracks that continues further north (and connects to the 39th Street line also recently installed by the City).***

PLANNING COMMISSION REVIEW:

The Planning Commission reviewed the Easton Village 3rd Addition Final Plat at its July 10, 2017 meeting. The Planning Commission had the following comments in regards to this proposed Final Plat:

- Discussion on whether the City is doing enough to mitigate noise and safety concerns associated with nearby airport.
- Recommendation of addition of following condition:
    - 10) All title work must be submitted and accepted prior to recording of Final Plat.
        - *Staff comment:* This is a standard procedure before releasing any final plat for recording.

Staff is recommending certain conditions that been specifically identified as part of the final plat review, and that have not otherwise been addressed by the applicant, be addressed as part of the Planning Commission's recommendation to the City Council. The City Engineer's review letter does identify several issues that need to be addressed by the developer in order for the City to deem the final plans complete. Staff is recommending that City Officials not sign the final plat mylars until the City's construction plan review is finalized and all necessary easements are documented on the final plat.

Based on the above Staff report and analysis, Staff is recommending approval of the final plat with several conditions intended to address the outstanding issues noted above and to further clarify the City's expectations in order for the developer to proceed with the recording of the final plat.

The recommended conditions are as follows:

Recommended Conditions of Approval:

1) Final grading, drainage, and erosion control plans, sanitary and storm water management plans, landscape plans, and street and utility construction plans shall be reviewed and approved by the City Engineer and applicable Staff prior to the recording of the Final Plat. All changes and modifications to the plans requested by the City Engineer in the memorandums addressing Easton Village 3rd Addition Final Plat and Easton Village 3rd Addition Construction Plan Review dated May 25, 2017 in the memo shall be incorporated into these documents before they are approved.

2) Prior to the execution of the Final Plat by City officials, the Developer shall enter into a Developer's Agreement acceptable to the City Attorney and approved by the City Council that delineates who is responsible for the design, construction, and payment of the required improvements for the Easton Village 3rd Addition Final Plat with financial guarantees therefore.

3) All easements as requested by the City Engineer and Public Works Department shall be documented on the Final Plat prior to its execution by City Officials.

4) The Applicant shall submit an updated Landscape Plan that is consistent with Preliminary Landscape Plans. The updated plans will need to be approved by the City.

5) A Landscape License Agreement shall be executed for the maintenance of commonly held HOA and City outlots and right-of-ways prior to release of the final plat by City Officials.

6) A temporary easement for the temporary cul-de-sac connecting 33rd Street North to Village Parkway shall be fully executed on the City standard easement agreement form.

7) The applicant shall provide a disclosure statement to all first homeowners in the development advising of the airport and associated over-flights.

8) All builders shall be encouraged to incorporate interior noise reduction measures into single family residential structures within the subdivision based on the Metropolitan Council's Builder Guide.

9) The developer shall abide by any conditions of approval as listed in permits issued by Northern Natural Gas to perform construction work over the gas line that runs from north to south across this site.

10) All title work must be submitted and accepted prior to recording of Final Plat.

DRAFT FINDINGS

Staff is recommending that the Planning Commission consider the following findings with regards to the proposed Easton Village 3rd Addition Final Plat:

1) That all the requirements of City Code Section 153.07 related to the Final Plan and Final Plat have been met by the Applicant.

2) That the proposed Final Plat for Easton Village consists of the creation of 28 single-family detached residential structures.

3) That the Easton Village 3rd Addition Final Plat is generally consistent with the Preliminary Plat and Plans as approved by the City of Lake Elmo on July 15, 2014 and as amended and approved on June 21, 2017.

4) That the Easton Village 3rd Addition Final Plat is consistent with the Lake Elmo Comprehensive Plan and the Future Land Use Map for this area.

5) That the Easton Village 3rd Addition Final Plat complies with the City's Urban Low Density Residential zoning district regulations.

6) That the Easton Village 3rd Addition Final Plat complies with all other applicable zoning requirements, including the City's landscaping, storm water, sediment and erosion control and other ordinances with the exception of issues identified in the July 10, 2017 Staff report to the Planning Commission.

7) That the Easton Village 3rd Addition Final Plat complies with the City's subdivision ordinance.

8) That the Easton Village 3rd Addition Final Plat is generally consistent with the City's engineering standards with the exception of necessary plan revisions outlined by the City Engineer in his review comments to the City dated May 25, 2017.

RECCOMENDATION:

Staff and the Planning Commission recommend the Council approve the 3rd Addition Final Plat for Easton Village with the 10 conditions of approval as listed in the Staff report. Suggested motion:

"Move to adopt Resolution 2017-076, approving Easton Village 3rd Addition Final Plat with the 10 conditions of approval as recommended by Staff and the Planning Commission."

ATTACHMENTS:

1. Application Narrative
2. City Engineer Review Memo Dated May 25, 2017
3. Easton Village 3rd Addition Final Plat and Plans
4. Pages from Revised Preliminary Plans dated June 21, 2017
5. Valley Branch Watershed District Permit
6. Resolution 2017-076

SUGGESTED ORDER OF BUSINESS:

- Introduction.....Planning Staff
- Report by Staff.....Planning Staff
- Questions from the Commission..... Chair & Commission Members
- Open the Public Hearing.....Chair
- Close the Public Hearing.....Chair
- Discussion by the Commission..... Chair & Commission Members
- Action by the Commission..... Chair & Commission Members

EASTON VILLAGE 3RD ADDITION

FINAL PLAT WRITTEN STATEMENTS

February 14, 2017

A) PROJECT CONTACTS:

OWNER:
Tom Wolter
Easton Village, LLC
2140 County Road 42 West
Burnsville, MN 55337
Phone: 952-292-0046
timbercrest@ymail.com

DEVELOPER:
Tom Wolter
Chase Development
2140 County Road 42 West
Burnsville, MN 55337
Phone: 952-292-0046
timbercrest@ymail.com

AUTHORIZED AGENT:
Project Contact/Engineer:
Todd A. Erickson, PE
EricksonCivil
333 North Main Street, Suite 201
Stillwater, MN 55082
Phone: 612-309-3804
todd@tericksonllc.com

Surveyor:
Paul A. Johnson, LS, EricksonCivil

Landscape Architect:
David Chmielewski, LA, EricksonCivil

B) SITE DATA:

Address: No current address. 32xx Lilac Lane North.

Current Zoning: LDR

Parcel Size: 9.61 Acres, 418,620 Sq. Ft.

PID No.: 13.029.21.42.0025

Current Legal: Part of Outlot F, Easton Village, Washington County, Minnesota. See also Final Plat Dedication Page 1 of 2.

C) FINAL SUBDIVISION AND LOT INFORMATION:

Name of Final Plat: Easton Village 3rd Addition

Table of Proposed Lots:

Lot	Block	Area (Sq. Ft.)	Area (Acre)	Lot Width (1)	Lot Depth (2)
1	1	11,194	0.257	70	160
2	1	11,167	0.256	70	160
3	1	10,935	0.251	70	155
1	2	16,641	0.382	83	200
2	2	8,140	0.187	67	120
3	2	9,405	0.216	75	125
4	2	8,522	0.196	65	130
5	2	8,555	0.196	70	130
6	2	8,483	0.195	65	130
7	2	8,836	0.203	65	130
8	2	10,237	0.235	77	135
9	2	12,143	0.279	87	145
10	2	11,958	0.275	75	150
1	3	14,294	0.328	72	197
2	3	9,217	0.212	67	138
3	3	9,231	0.212	67	135
4	3	9,124	0.209	65	130
5	3	8,450	0.194	65	130
6	3	9,100	0.209	70	130
7	3	8,724	0.200	70	130
8	3	8,138	0.187	70	130
9	3	9,777	0.224	75	130
10	3	10,307	0.237	70	130
11	3	12,769	0.293	65	155
12	3	15,491	0.356	65	175
13	3	12,330	0.283	65	150
14	3	9,519	0.219	65	132
15	3	8,650	0.199	65	132
Outlot A		4,814	0.111		
Outlot B		3,971	0.091		
ROAD RIGHT OF WAY		118,498	2.720	(Includes Village Parkway)	
TOTAL AREA DEVELOPED		418,620	9.610		

(1) Lot width at setback shown on plan

(2) Average approximate lot length, some lots are irregular in shape (see plan for exact dimensions)

Area of Parks and Trails:	Oulot B, Trail, 0.091 Acres, $38,000 cost.
Area of Wetlands and Buffers:	None on this proposed addition.
Final Area of Dedicated Right of Way:	1.684 Acres
Legal Description of All Lots:	See Final Plat Graphics, Sheet 2 of 2.
Easements to be Vacated:	Temporary Roadway Easement (Easton Village)

D. EXPLANATION OF ISSUES SINCE PRELIMINARY PLAT:

This addition of the Easton Village project requires additional import to complete. The stockpile of this material will continue to the north of the Third Addition where a portion of the needed material is currently stockpiled today. This operation started with the grading of Phase II of Easton Village, with the hope of obtaining all of the material from the City infiltration project, which did not happen. This addition will also finalize the gas line crossing issue, which adjusted the pond elevation and HWL of the northeast pond to accommodate the storm sewer outlet of the City infiltration basin project which help to raise up the outfall to accommodate the gas line. The proposed grading will also relieve the water that is currently flowing across the farm field to the outlet structure of the first addition to Easton Village.

Also, the lot layout has been revised to adjust to market conditions, allowing for wider lots and a mixture of lots to create more variety and options for builders. This adjustment of lots will not alter the overall density and is not a request to increase or decrease the overall density of the preliminary plat, only a request to adjust lot lines to accommodate some more variety for the overall subdivision.

E. FINAL DENSITY:

Same as presented for Preliminary Plat Documents. Below is a summary of the density calculation of the preliminary plat of Easton Village:

AREA CALCULATION SUMMARY	
PARK AREA	7.96
OPEN SPACE	18.90
LOT AREA	52.25
RIGHT OF WAY	19.37
RUNWAY PROTECTION ZONE	4.77
STEEP SLOPE AREAS	2.65
TOTAL PROPERTY AREA	98.47
TOTAL PROPOSED LOTS	217
PERCENT OF OPEN SPACE/PARK	27.3%
GROSS DENSITY	2.20
NET DENSITY*	2.38

F. INFRASTRUCTURE IMPROVMENTS:

The proposed storm sewer will be connected to the existing storm sewer constructed with Easton Village. The water main and sanitary sewer will be extended from the constructed water and sewer of Easton Village. All utilities will be constructed per city standards. The storm water ponding for this addition has been planned for and will be accommodated by the existing constructed pond of Easton Village. Stubs for water and sewer will be installed for future phases of the overall project.

G. CONCERNS OF NEIGHBORING PROPERTIES:

No known issues.

H. CONFLICTS WITH NEARBY LAND USES:

No known issues.

I. JUSTIFICATION RELATING TO BURDEN ON EXISTING INFRASTRUCTURE:

This project is a part of an overall larger project, which density has been planned for with the installation of a trunk sewer and watermain and highway right turn and bypass lane for access, therefore this project will not create any undue burden on the existing infrastructure of the City or surrounding area. In addition to the water and sewer charges the City will get from this project, it will add approximately $20,000 a year in tax payments to the City of Lake Elmo, with additional tax payments going to the County, School District and Met Council to offset any "burden" created by this project.

J. PROPOSED LAKESHORE ACCESS:

None Proposed.

K. PROPOSED PARKS AND OPEN SPACE:

Outlot B, proposed as trail connection open space. Outlot A, open space for planting of trees. Easton Village currently contains a park and open space, dedicated with the first addition of the project.

L. CONSTRUCTION SCHEDULE:

Construction would be expected to begin as soon as possible in the spring of 2017. Substantial completion of the project would occur in the fall of 2017.

MEMORANDUM

FOCUS ENGINEERING, inc.

Cara Geheren, P.E.	**651.300.4261**
Jack Griffin, P.E.	**651.300.4264**
Ryan Stempski, P.E.	**651.300.4267**
Chad Isakson, P.E.	**651.300.4283**

Date: May 25, 2017

To: Stephen Wensman, City Planner
Cc: Chad Isakson, P.E., Municipal Engineer
From: Jack Griffin, P.E., City Engineer

Re: Easton Village 3rd Addition – Final Plat
Engineering Review Comments

An engineering review has been completed for Easton Village 3rd Addition. Final Plat/Construction Plans were received on May 4, 2017. The submittal consisted of the following documentation prepared by Erickson Civil:

- Easton Village Preliminary Plat Revisions dated April 28, 2017.
- Easton Village 2nd and 3rd Additions Drainage Analysis dated April 28, 2017.
- Easton Village 3rd Addition Construction Plans and Final Plat dated April 28, 2017.
- Easton Village 3rd Final Plat Narrative dated February 14, 2017.

STATUS/FINDINGS: Engineering review comments have been provided in two separate memos; one for Final Plat approval, and one to assist with the completion of the final Construction Plans. Please see the following review comments relating to the Final Plat application.

FINAL PLAT: EASTON VILLAGE 3RD ADDITION

- Outlots A (Stormwater) and B (Bituminous Trail) must be dedicated to the City as part of the Final Plat. City ownership of the Outlots must be noted on the final construction plans.
- All easements as requested by the City Engineer and Public Works department shall be documented on the Final Plat prior to the release of the Final Plat for recording.
- Final Plat should be contingent upon the City receiving copies of fully executed temporary easements using the City standard agreement form for the temporary cul-de-sac and connecting street to Village Parkway.
- Final Plat should be contingent upon the applicant updating the preliminary plans in accordance with the engineering review memorandum dated May 23, 2017 and approved by the City Engineer.
- Final Plat should be contingent upon the applicant updating the plans to maintain all 100-year HWL elevations within easement areas and revising the plans for all storm water ponds to meet City design requirements.
- Easton Village 3rd Addition includes trunk watermain (12-inch diameter) pipe oversizing along Lilac Avenue North. Payment for pipe oversizing from the City standard 8-inch pipe should be addressed as part of the development agreement.
- No construction for Easton Village 3rd Addition may begin until the applicant has received City Engineer approval for the Final Construction Plans; the applicant has obtained and submitted to the City all applicable permits, easements and permissions needed for the project; and a preconstruction meeting has been held by the City's engineering department.
- The Final Plat shall not be recorded until final construction plan approval is granted.
- Final Construction Plans and Specifications must be revised in accordance with the Construction Plan engineering review memorandum dated May 25, 2017 and approved by the City Engineer. Final Construction Plans and Specifications must be prepared in accordance with the City Engineering Design Standards Manual using City details, plan notes and specifications and meeting City Engineering Design Guidelines.

EASTON VILLAGE

LAKE ELMO, MINNESOTA

3RD ADDITION - FINAL PLAN

GRADING, EROSION CONTROL, STREET, STORM SEWER, UTILITY, LANDSCAPE AND PLAT

APRIL 28, 2017

3RD ADDITION - 28 UNIT SINGLE FAMILY RESIDENTIAL SUBDIVISION

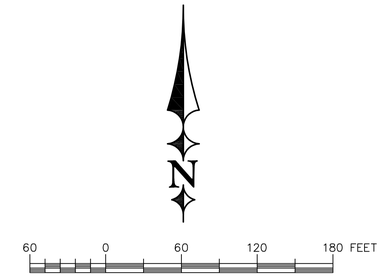

GRAPHIC SCALE

Site Location Map

Section 12 & 13, T29N - R21W
Washington County, Minnesota

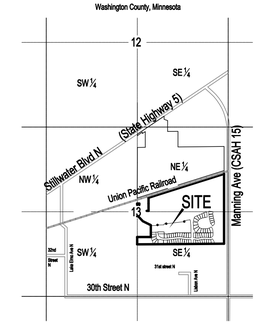

PLAN SHEET INDEX:

NOTE: ALL CONSTRUCTION SHALL COMFORM TO THE STANDARDS OF THE CITY OF LAKE ELMO

ERICKSON CIVIL

333 North Main Street, Suite 201
Stillwater, Minnesota 55082
Phone (612) 309-3804

www.ericksoncivilsite.com

DRAWING PHASE:

	OWNER REVIEW
	AGENCY REVIEW
	BID DOCUMENT
✓	FOR CONSTRUCTION
	AS-BUILT DOCUMENT

I HEREBY CERTIFY THAT THIS PLAN, SPECIFICATION OR REPORT WAS PREPARED BY ME OR UNDER MY DIRECT SUPERVISION AND THAT I AM A DULY LICENSED PROFESSIONAL ENGINEER UNDER THE LAWS OF THE STATE OF MINNESOTA.

TODD A. ERICKSON, PE

LICENSE NO. 40418

DATE: 04/28/2017

OWNER/DEVELOPER

CHASE DEVELOPMENT
2140 COUNTY ROAD 42 WEST
BURNSVILLE, MN 55337

PROJECT TITLE

EASTON VILLAGE
3RD ADDITION
FINAL PLAN
LAKE ELMO, MINNESOTA

NO.	REVISION DESCRIPTION	DATE
1	City Review	6-21-17

JOB NO. 16-176

SHEET TITLE

TITLE SHEET

SHEET NO.

C1

SHEET 1 OF 25

Legend

- 3RD ADDITION BOUNDARY
- 922 — EXISTING 2-FT CONTOUR
- EXISTING STORM SEWER
- EXISTING WATERMAIN
- EXISTING SANITARY SEWER

Keyed Notes

1. EXISTING CUL DE SAC SHALL BE REMOVE IN IT'S ENTIRETY.

N

50 0 50 100 150 FEET

GRAPHIC SCALE

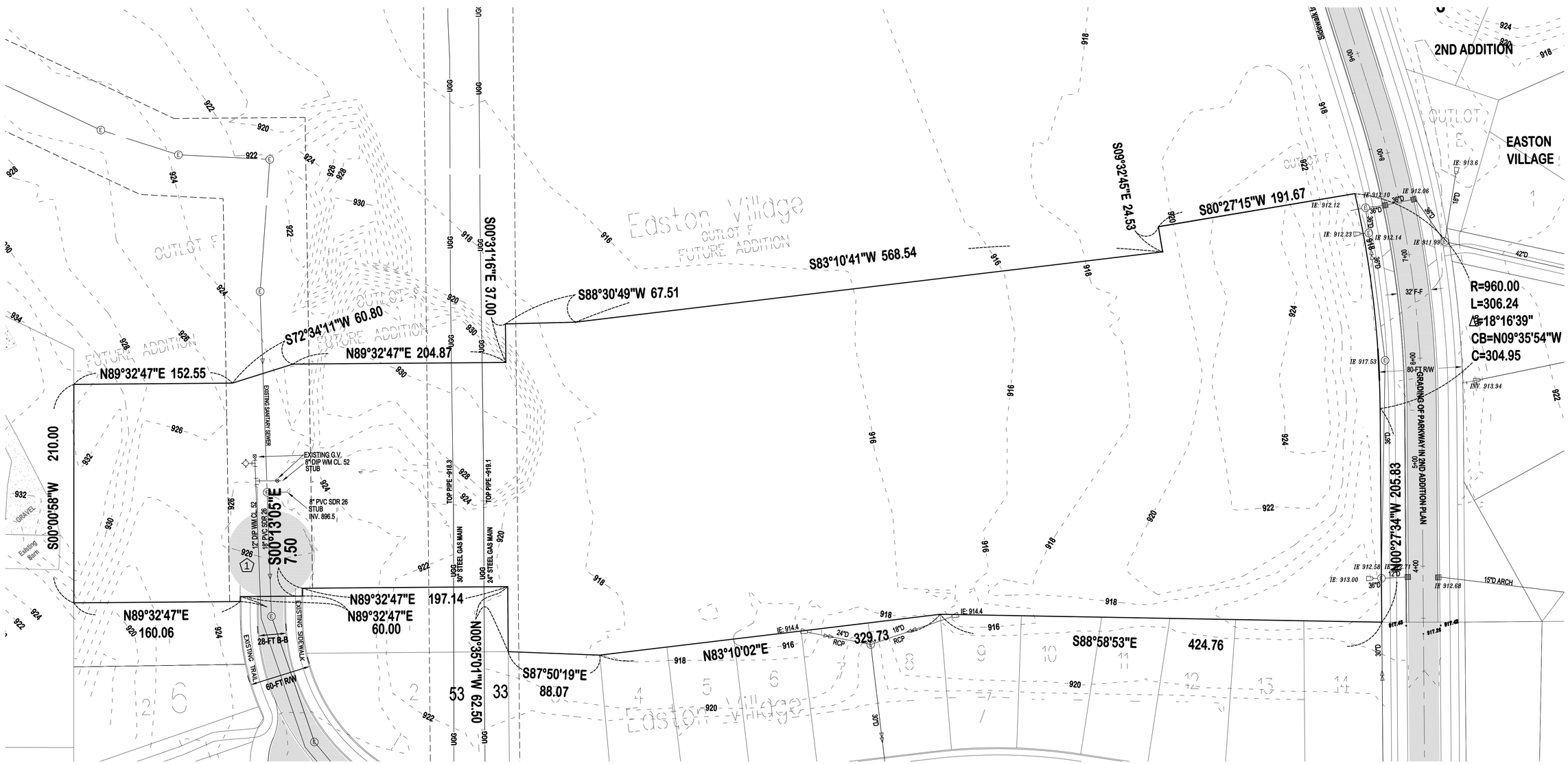

ERICKSON CIVIL
333 North Main Street, Suite 201
Stillwater, Minnesota 55082
Phone (612) 309-3804
www.ericksoncivilsite.com

DRAWING PHASE:

	OWNER REVIEW
	AGENCY REVIEW
	BID DOCUMENT
✓	FOR CONSTRUCTION
	AS-BUILT DOCUMENT

I HEREBY CERTIFY THAT THIS PLAN, SPECIFICATION OR REPORT WAS PREPARED BY ME OR UNDER MY DIRECT SUPERVISION AND THAT I AM A DULY LICENSED PROFESSIONAL ENGINEER UNDER THE LAWS OF THE STATE OF MINNESOTA.

TODD A. ERICKSON, PE

LICENSE NO. 40418

DATE: 04/28/2017

OWNER/DEVELOPER
CHASE DEVELOPMENT
2140 COUNTY ROAD 42 WEST
BURNSVILLE, MN 55337

PROJECT TITLE
EASTON VILLAGE
3RD ADDITION
FINAL PLAN
LAKE ELMO, MINNESOTA

NO.	REVISION DESCRIPTION	DATE
1	City Review	6-21-17

JOB NO. 16-176

SHEET TITLE
EXISTING CONDITIONS

SHEET NO.
C2

Legend

- 3RD ADDITION BOUNDARY
- 922 EXISTING 2-FT CONTOUR
- EXISTING STORM SEWER
- EXISTING WATERMAIN
- EXISTING SANITARY SEWER
- 914.55 EXISTING SURFACE ELEVATION POINT

N

60 0 60 120 180 FEET

GRAPHIC SCALE

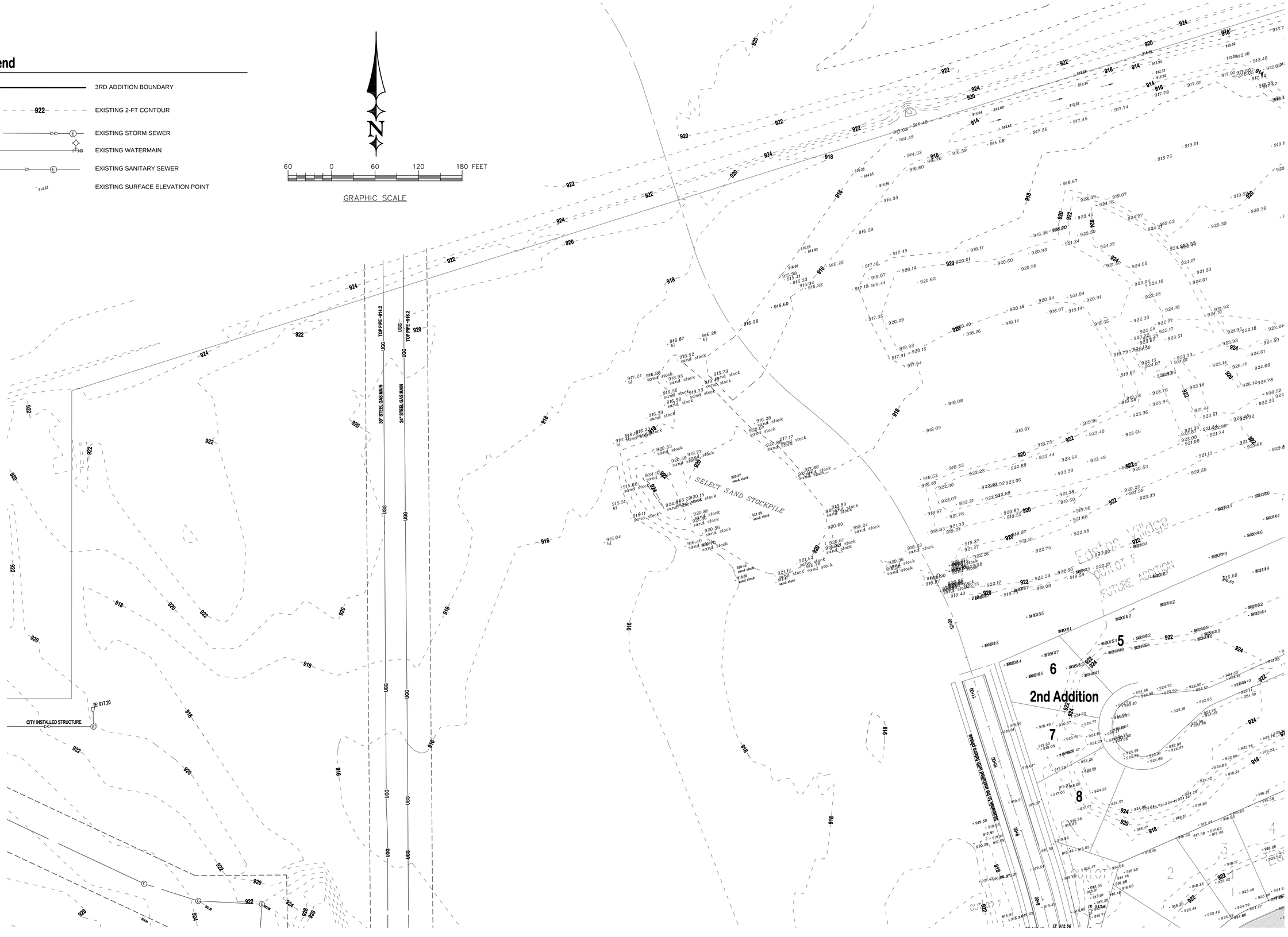

ERICKSON CIVIL

333 North Main Street, Suite 201
Stillwater, Minnesota 55082
Phone (612) 309-3804

www.ericksoncivilsite.com

DRAWING PHASE:	
	OWNER REVIEW
	AGENCY REVIEW
	BID DOCUMENT
√	FOR CONSTRUCTION
	AS-BUILT DOCUMENT

I HEREBY CERTIFY THAT THIS PLAN, SPECIFICATION OR REPORT WAS PREPARED BY ME OR UNDER MY DIRECT SUPERVISION AND THAT I AM A DULY LICENSED PROFESSIONAL ENGINEER UNDER THE LAWS OF THE STATE OF MINNESOTA.

TODD A. ERICKSON, PE

LICENSE NO. 40418

DATE: 04/28/2017

OWNER/DEVELOPER

CHASE DEVELOPMENT
2140 COUNTY ROAD 42 WEST
BURNSVILLE, MN 55337

PROJECT TITLE

EASTON VILLAGE
3RD ADDITION
FINAL PLAN
LAKE ELMO, MINNESOTA

NO.	REVISION DESCRIPTION	DATE
1	City Review	6-21-17

JOB NO. 16-176

SHEET TITLE

EXISTING CONDITIONS

SHEET NO.

C3

SHEET 3 OF 25

Legend

- 3RD ADDITION BOUNDARY
- 922 EXISTING 2-FT CONTOUR
- EXISTING STORM SEWER
- EXISTING WATERMAIN
- EXISTING SANITARY SEWER
- 914.55 EXISTING SURFACE ELEVATION POINT

N

60 0 60 120 180 FEET

GRAPHIC SCALE

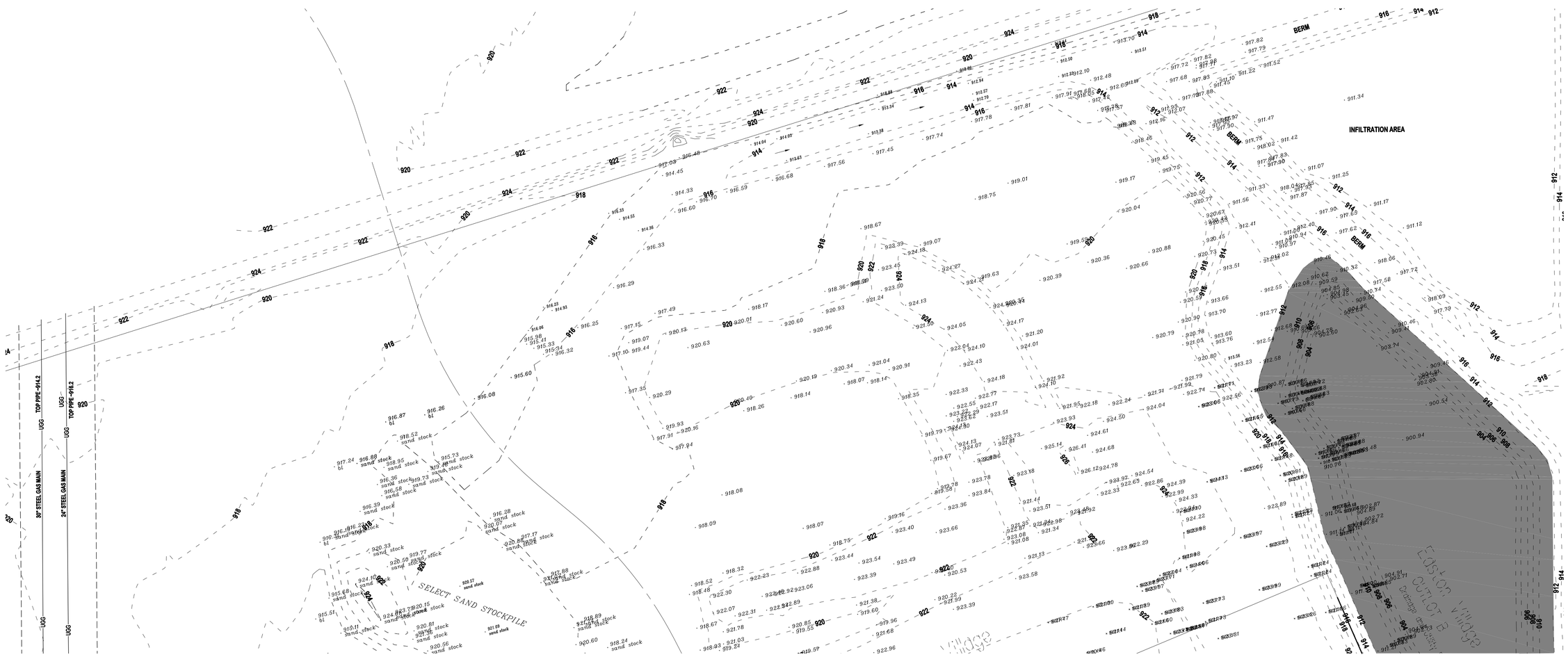

ERICKSON CIVIL

333 North Main Street, Suite 201
Stillwater, Minnesota 55082
Phone (612) 309-3804

www.ericksoncivilsite.com

DRAWING PHASE:

	OWNER REVIEW
	AGENCY REVIEW
	BID DOCUMENT
√	FOR CONSTRUCTION
	AS-BUILT DOCUMENT

I HEREBY CERTIFY THAT THIS PLAN, SPECIFICATION OR REPORT WAS PREPARED BY ME OR UNDER MY DIRECT SUPERVISION AND THAT I AM A DULY LICENSED PROFESSIONAL ENGINEER UNDER THE LAWS OF THE STATE OF MINNESOTA.

TODD A. ERICKSON, PE

LICENSE NO. 40418

DATE: 04/28/2017

OWNER/DEVELOPER

CHASE DEVELOPMENT
2140 COUNTY ROAD 42 WEST
BURNSVILLE, MN 55337

PROJECT TITLE

EASTON VILLAGE
3RD ADDITION
FINAL PLAN
LAKE ELMO, MINNESOTA

NO.	REVISION DESCRIPTION	DATE
1	City Review	6-21-17

JOB NO. 16-176

SHEET TITLE

EXISTING CONDITIONS

SHEET NO.

C4

GRADING AND EROSION CONTROL NOTES:

1) SPOT ELEVATIONS ARE ALL GUTTER LINE OR FINISHED ELEVATION UNLESS NOTED OTHERWISE.

2) ELEVATIONS/CONTOURS SHOWN AS FINISHED GRADE ELEVATIONS.

3) REFER TO GEOTECHNICAL REPORT FOR ADDITIONAL REQUIREMENTS.

4) DO NOT SPREAD TOPSOIL WHILE IT IS FROZEN OR MUDDY OR WHEN THE SUBGRADE IS WET OR FROZEN. CORRECT ANY IRREGULARITIES IN THE SURFACE THAT RESULT FROM TOPSOIL SPREADING OR OTHER OPERATIONS TO PREVENT THE FORMATION OF DEPRESSIONS OR WATER POCKETS. BERMING OR DOUBLE LAYERING OR BIO LOG MAY BE REQUIRED TO CONTAIN RUNOFF IF SILT FENCING CANNOT BE INSTALLED PROPERLY DURING FROZEN CONDITIONS.

5) CONTRACTOR SHALL SCHEDULE SOILS TESTING FOR EACH STRUCTURAL FILL AREA, PAD AND STREET AREA.

6) PRIOR TO ROUGH GRADING, INSTALL FIBER ROLLS AND SILT FENCE IN LOCATIONS SHOWN OR AS DIRECTED BY THE ENGINEER OR CITY STAFF.

7) AS EACH AREA OUTSIDE OF THE STREET IS GRADED, PROVIDE 6" OF NATIVE TOPSOIL, SEED AND MULCH ANCHORED WITH A STRAIGHT DISC WITHIN 48 HOURS OF FINE GRADING.

8) SLOPES 3:1 AND GREATER SHALL BE STABILIZED WITH FIBER BLANKET.

9) MAINTAIN AND REPAIR FIBER ROLL AND SILT FENCE (INCLUDING REMOVAL OF ACCUMULATED SILT WITHIN 24 HOURS UPON DETECTION OR NOTIFICATION) UNTIL VEGETATION IS 70% ESTABLISHED.

10) CONTRACTOR TO INSPECT AND DOCUMENT EROSION CONTROL A MINIMUM OF ONCE EVERY SEVEN DAYS AND WITHIN 24 HOURS OF ANY RAIN EVENT GREATER THAN 1/2 INCH IN 24 HOURS AND WITHIN SEVEN DAYS AFTER THAT EVENT.

11) BIO LOG AND SILT FENCE FOUND DAMAGED MUST BE REPAIRED OR REPLACED W/IN 24 HOURS UPON DISCOVERY. REMOVAL OF FIBER ROLL AND SILT FENCE REQUIRED AFTER SITE IS STABILIZED (AT DIRECTION OF ENGINEER).

12) ALL PUBLIC STREETS SHALL BE KEPT FREE OF SEDIMENT AND DEBRIS. ANY SEDIMENT OR DEBRIS DETECTED MUST BE REMOVED WITHIN 24 HOURS OR AS DIRECTED BY CITY.

13) ALL EXPOSED SOIL SHALL BE STABILIZED AS SOON AS POSSIBLE, BUT NO LATER THAN 14 DAYS AFTER CONSTRUCTION ACTIVITY HAS TEMPORARILY OR PERMANENTLY CEASED.

14) ALL PROPOSED AND EXISTING CATCH BASINS WITHIN PROJECT AREA SHALL BE PROVIDED INLET PROTECTION. REGULAR CLEANING OF PROTECTION SHALL OCCUR AND SHALL BE INCLUDED IN THE UNIT PRICE OF INLET PROTECTION.

15) ANY DEBRIS FOUND OR UNEARTHED ON THE SITE SHALL BE THE RESPONSIBILITY OF THE CONTRACTOR FOR DISPOSAL AND PAID FOR AT THE UNIT PRICE PER CU. YD. OF DEBRIS REMOVAL.

16) ON- SITE BURY OF TREES SHALL BE SCRICTLY PROHIBITED. TREES MAY BE BURNED WITH PROPER PERMITTING AND APPROVAL FROM CITY.

17) ALL PIPE OUTFALLS SHALL BE PROTECTED WITH RIPRAP PER CITY DETAIL.

18) ALL CITY STANDARD NOTES AS FOUND ON SHEET C5 SHALL BE FOLLOWED.

KEYED NOTES

1. INSTALL SILT FENCE
2. INSTALL ROCK CONSTRUCTION ENTRANCE
3. INSTALL MNDOT SPEC. 9" BIO LOG
4. INSTALL INLET PROTECTION
5. INSTALL EROSION CONTROL BLANKET TYPE CAT. 2 WOOD FIBER

LEGEND

- 3RD ADDITION BOUNDARY
- 920 — EXISTING 2-FT CONTOUR INTERVAL
- 920 — PROPOSED 2-FT CONTOUR INTERVAL
- PROPOSED STORM SEWER (SIZE INDICATED ON PLANS)
- SILT FENCE
- INSTALL DITCH CHECK (MNDOT SPEC. 9" BIO LOG)
- ROCK CONSTRUCTION ENTRANCE
- EROSION CONTROL BLANKET (CAT. 2, WOOD FIBER) (CAT. 4 IN BOTTOM OF SWALES)

SEEDING: 1) LOTS AND OPEN SPACE, LOW GROW FESCUE @ 220 LBS./ACRE.
TOPSOIL: 6" MINIMUM DEPTH, MEETING MNDOT SPEC. FOR TOPSOIL BORROW.

NOTE: ALL SEED SHALL BE DRILLED AND NOT SPREAD.

ALL SEEDING SHALL BE COVERED WITH WEED FREE MN/DOT TYPE 3 MULCH APPLIED @ 2 TONS PER ACRE.

SWPPP SEQUENCING

1) OBTAIN MPCA PERMIT MINIMUM 7 DAYS PRIOR TO STARTING TREE CLEARING ACTIVITIES.
2) INSTALL ROCK CONSTRUCTION ENTRANCE AS SHOWN IN DETAILS.
3) INSTALL SEDIMENT INLET PROTECTION AT EXISTING CATCH BASINS AND MAINTAIN DURING PROJECT.
4) INSTALL SILT FENCING AS SHOWN ON PLAN PRIOR TO ANY SITE DISTURBANCE.
5) MAINTAIN SWPPP MAILBOX WITH A COPY OF THE PLANS, SWPPP AND EROSION CONTROL LOGS.
6) NOTIFY CITY FOR INSPECTION OF PERIMETER EROSION CONTROL MEASURES PRIOR TO STARTING CONSTRUCTION (3 BUSINESS DAY NOTIFICATION REQUIRED).
7) STOCKPILE TOPSOIL AND INSTALL PERIMETER BIO LOG SURROUNDING STOCKPILES REQUIRED
8) SEED TOPSOIL STOCKPILE WITH MINIMUM 20/LBS PER ACRE OATS.
9) CONDUCT GRADING OPERATIONS.
10) COMPLETE GRADING AND INSTALL TOPSOIL, SEED AND BLANKET
11) INSTALL UNDERGROUND UTILTIES AND CATCH BASIN INLET PROTECTION.
12) INSTALL ROCK BASE FOR ROADWAY, CONCRETE CURB AND GUTTER AND SIDEWALK.
13) INSTALL BOULEVARD TREES.
14) HYDROSEED OR SEED AND BLANKET DISTURBED AREAS ALONG STREET.
15) PAVE TRAIL AND STREET.
16) CLEAN OUT AND MAINTAIN ANY SEDIMENT FROM SILT FENCING, BIO LOGS AND INLET PROTECTION.

ANY DEWATERING FROM THE SITE WILL REQUIRE THE WATER BE FILTERED THROUGH A 'DANDY BAG' OR EQUAL. WATER SHOULD BE DIRECTED TO THE AREA OF B1 BEHIND THE PROPOSED SILT FENCING OR AS APPROVED BY THE ENGINEER.

CITY STANDARD PLAN NOTES

1. RESTORE ALL DISTURBED AREAS WITH 6 INCHES OF TOPSOIL CONFORMING TO MNDOT 3877.
2. PROTECT ALL STORM SEWER INLETS AS SPECIFIED HEREIN AND MAINTAIN UNTIL STREET CONSTRUCTION IS COMPLETED.
3. MAINTAIN ALL SILT FENCE AND REPAIR OR REPLACE AS NEEDED OR REQUIRED UNTIL TURF HAS BEEN ESTABLISHED.
4. RESTORATION WORK SHALL BEGIN WITHIN 7 DAYS OF FINAL GRADING.
5. A MINIMUM OF 2 ROWS OF SOD SHALL BE PLACED ADJACENT TO THE BACK OF CURBS ALONG ALL BOULEVARDS. SILT FENCE SHALL BE PLACED DIRECTLY BEHIND THE SOD IN ACCORDANCE WITH THE CITY STANDARD DETAILS.
6. BOULEVARD AND DITCH RESTORATION INCLUDES FINE GRADING, WHICH INCLUDES THE REMOVAL OF ROCKS, DEBRIS AND SOIL CHUNKS, WHILE MAINTAINING POSITIVE DRAINAGE.

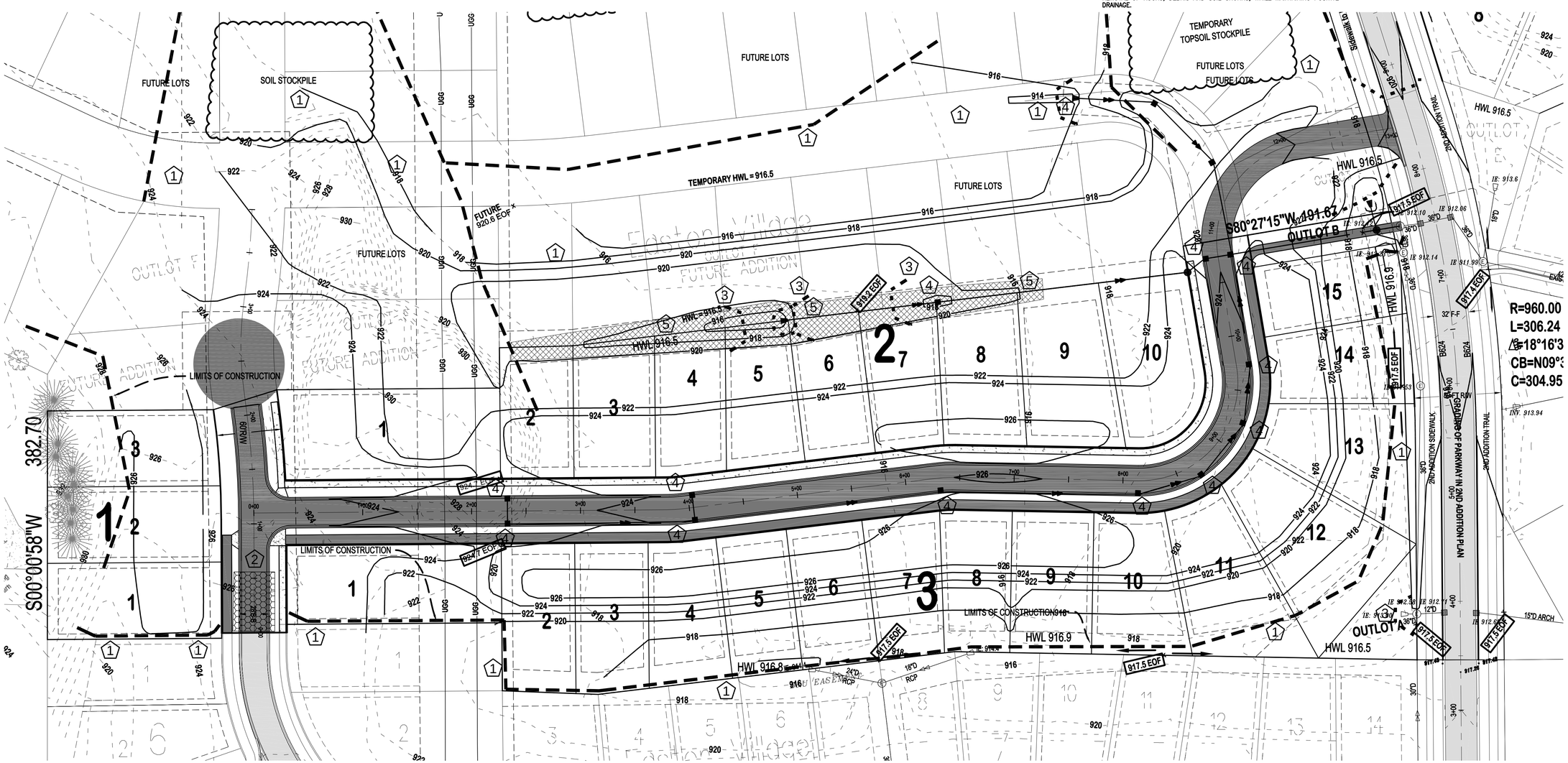

ERICKSON CIVIL
333 North Main Street, Suite 201
Stillwater, Minnesota 55082
Phone (612) 309-3804
www.ericksoncivilsite.com

DRAWING PHASE:

	OWNER REVIEW
	AGENCY REVIEW
	BID DOCUMENT
✓	FOR CONSTRUCTION
	AS-BUILT DOCUMENT

I HEREBY CERTIFY THAT THIS PLAN, SPECIFICATION OR REPORT WAS PREPARED BY ME OR UNDER MY DIRECT SUPERVISION AND THAT I AM A DULY LICENSED PROFESSIONAL ENGINEER UNDER THE LAWS OF THE STATE OF MINNESOTA.

TODD A. ERICKSON, PE
LICENSE NO. 40418
DATE: 04/28/2017

OWNER/DEVELOPER
CHASE DEVELOPMENT
2140 COUNTY ROAD 42 WEST
BURNSVILLE, MN 55337

PROJECT TITLE
EASTON VILLAGE
3RD ADDITION
FINAL PLAN
LAKE ELMO, MINNESOTA

NO.	REVISION DESCRIPTION	DATE
1	City Review – Grade Changes	6-21-17

JOB NO. 16-176

SHEET TITLE
EROSION CONTROL PLAN

SHEET NO.
C6

SHEET 6 OF 25

GRADING AND EROSION CONTROL NOTES:

1) SPOT ELEVATIONS ARE ALL GUTTER LINE OR FINISHED ELEVATION UNLESS NOTED OTHERWISE.

2) ELEVATIONS/CONTOURS SHOWN AS FINISHED GRADE ELEVATIONS.

3) REFER TO GEOTECHNICAL REPORT FOR ADDITIONAL REQUIREMENTS.

4) DO NOT SPREAD TOPSOIL WHILE IT IS FROZEN OR MUDDY OR WHEN THE SUBGRADE IS WET OR FROZEN. CORRECT ANY IRREGULARITIES IN THE SURFACE THAT RESULT FROM TOPSOIL SPREADING OR OTHER OPERATIONS TO PREVENT THE FORMATION OF DEPRESSIONS OR WATER POCKETS. BERMING OR DOUBLE LAYERING OR BIO LOG MAY BE REQUIRED TO CONTAIN RUNOFF IF SILT FENCING CANNOT BE INSTALLED PROPERLY DURING FROZEN CONDITIONS.

5) CONTRACTOR SHALL SCHEDULE SOILS TESTING FOR EACH STRUCTURAL FILL AREA, PAD AND STREET AREA.

6) PRIOR TO ROUGH GRADING, INSTALL FIBER ROLLS AND SILT FENCE IN LOCATIONS SHOWN OR AS DIRECTED BY THE ENGINEER OR CITY STAFF.

7) AS EACH AREA OUTSIDE OF THE STREET IS GRADED, PROVIDE 6" OF NATIVE TOPSOIL, SEED AND MULCH ANCHORED WITH A STRAIGHT DISC WITHIN 48 HOURS OF FINE GRADING.

8) SLOPES 3:1 AND GREATER SHALL BE STABILIZED WITH FIBER BLANKET.

9) MAINTAIN AND REPAIR FIBER ROLL AND SILT FENCE (INCLUDING REMOVAL OF ACCUMULATED SILT WITHIN 24 HOURS UPON DETECTION OR NOTIFICATION) UNTIL VEGETATION IS 70% ESTABLISHED.

10) CONTRACTOR TO INSPECT AND DOCUMENT EROSION CONTROL A MINIMUM OF ONCE EVERY SEVEN DAYS AND WITHIN 24 HOURS OF ANY RAIN EVENT GREATER THAN 1/2 INCH IN 24 HOURS AND WITHIN SEVEN DAYS AFTER THAT EVENT.

11) BIO LOG AND SILT FENCE FOUND DAMAGED MUST BE REPAIRED OR REPLACED W/IN 24 HOURS UPON DISCOVERY. REMOVAL OF FIBER ROLL AND SILT FENCE REQUIRED AFTER SITE IS STABILIZED (AT DIRECTION OF ENGINEER).

12) ALL PUBLIC STREETS SHALL BE KEPT FREE OF SEDIMENT AND DEBRIS. ANY SEDIMENT OR DEBRIS DETECTED MUST BE REMOVED WITHIN 24 HOURS OR AS DIRECTED BY CITY.

13) ALL EXPOSED SOIL SHALL BE STABILIZED AS SOON AS POSSIBLE, BUT NO LATER THAN 14 DAYS AFTER CONSTRUCTION ACTIVITY HAS TEMPORARILY OR PERMANENTLY CEASED.

14) ALL PROPOSED AND EXISTING CATCH BASINS WITHIN PROJECT AREA SHALL BE PROVIDED INLET PROTECTION. REGULAR CLEANING OF PROTECTION SHALL OCCUR AND SHALL BE INCLUDED IN THE UNIT PRICE OF INLET PROTECTION.

15) ANY DEBRIS FOUND OR UNEARTHED ON THE SITE SHALL BE THE RESPONSIBILITY OF THE CONTRACTOR FOR DISPOSAL AND PAID FOR AT THE UNIT PRICE PER CU. YD. OF DEBRIS REMOVAL.

16) ON- SITE BURY OF TREES SHALL BE SCRICTLY PROHIBITED. TREES MAY BE BURNED WITH PROPER PERMITTING AND APPROVAL FROM CITY.

17) ALL PIPE OUTFALLS SHALL BE PROTECTED WITH RIPRAP PER CITY DETAIL.

18) ALL CITY STANDARD NOTES AS FOUND ON SHEET C5 SHALL BE FOLLOWED.

CITY STANDARD PLAN NOTES

1. RESTORE ALL DISTURBED AREAS WITH 6 INCHES OF TOPSOIL CONFORMING TO MNDOT 3877.
2. PROTECT ALL STORM SEWER INLETS AS SPECIFIED HEREIN AND MAINTAIN UNTIL STREET CONSTRUCTION IS COMPLETED.
3. MAINTAIN ALL SILT FENCE AND REPAIR OR REPLACE AS NEEDED OR REQUIRED UNTIL TURF HAS BEEN ESTABLISHED.
4. RESTORATION WORK SHALL BEGIN WITHIN 7 DAYS OF FINAL GRADING.
5. A MINIMUM OF 2 ROWS OF SOD SHALL BE PLACED ADJACENT TO THE BACK OF CURBS ALONG ALL BOULEVARDS. SILT FENCE SHALL BE PLACED DIRECTLY BEHIND THE SOD IN ACCORDANCE WITH THE CITY STANDARD DETAILS.
6. BOULEVARD AND DITCH RESTORATION INCLUDES FINE GRADING, WHICH INCLUDES THE REMOVAL OF ROCKS, DEBRIS AND SOIL CHUNKS, WHILE MAINTAINING POSITIVE DRAINAGE.

KEYED NOTES

1. INSTALL SILT FENCE
2. INSTALL MNDOT SPEC. 9" BIO LOG
3. INSTALL EROSION CONTROL BLANKET TYPE CAT. 2 WOOD FIBER

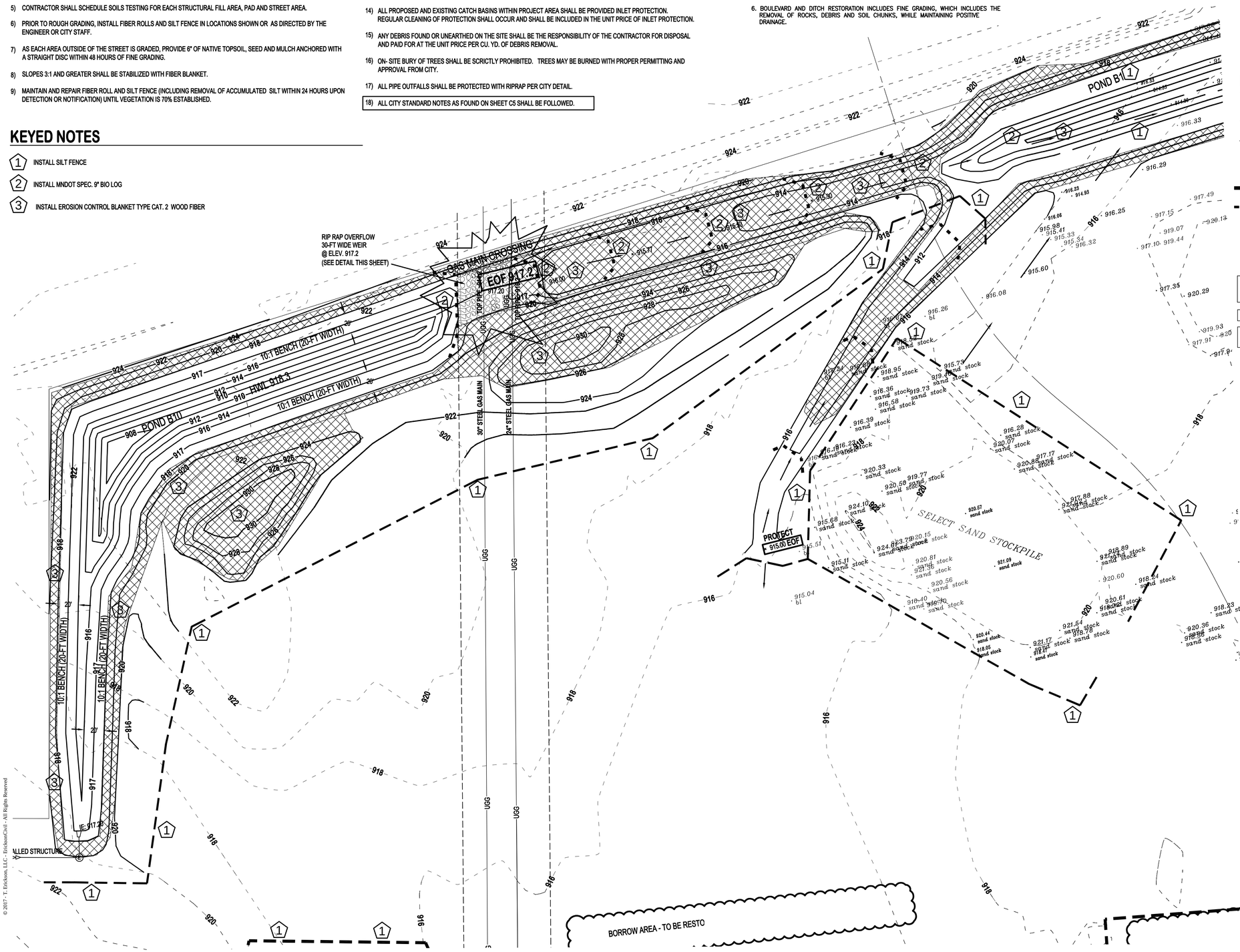

LEGEND

	3RD ADDITION BOUNDARY
920	EXISTING 2-FT CONTOUR INTERVAL
920	PROPOSED 2-FT CONTOUR INTERVAL
	PROPOSED STORM SEWER (SIZE INDICATED ON PLANS)
	SILT FENCE
	INSTALL DITCH CHECK (MNDOT SPEC. 9" BIO LOG)
	EROSION CONTROL BLANKET (CAT. 2, WOOD FIBER) (CAT. 4 IN BOTTOM OF SWALES)
916.29	EXISTING SPOT ELEVATION
* 914.36	PROPOSED SPOT ELEVATION

SEEDING: 1) LOTS AND OPEN SPACE, LOW GROW FESCUE @ 220 LBS./ACRE.
TOPSOIL: 6" MINIMUM DEPTH, MEETING MNDOT SPEC. FOR TOPSOIL BORROW.

NOTE: ALL SEED SHALL BE DRILLED AND NOT SPREAD.

ALL SEEDING SHALL BE COVERED WITH WEED FREE MN/DOT TYPE 3 MULCH APPLIED @ 2 TONS PER ACRE.

SWPPP SEQUENCING

1) OBTAIN MPCA PERMIT MINIMUM 7 DAYS PRIOR TO STARTING TREE CLEARING ACTIVITIES.
2) INSTALL ROCK CONSTRUCTION ENTRANCE AS SHOWN IN DETAILS.
3) INSTALL SEDIMENT INLET PROTECTION AT EXISTING CATCH BASINS AND MAINTAIN DURING PROJECT.
4) INSTALL SILT FENCING AS SHOWN ON PLAN PRIOR TO ANY SITE DISTURBANCE.
5) MAINTAIN SWPPP MAILBOX WITH A COPY OF THE PLANS, SWPPP AND EROSION CONTROL LOGS.
6) NOTIFY CITY FOR INSPECTION OF PERIMETER EROSION CONTROL MEASURES PRIOR TO STARTING CONSTRUCTION (3 BUSINESS DAY NOTIFICATION REQUIRED).
7) STOCKPILE TOPSOIL AND INSTALL PERIMETER BIO LOG SURROUNDING STOCKPILES REQUIRED
8) SEED TOPSOIL STOCKPILE WITH MINIMUM 20/LBS PER ACRE OATS.
9) CONDUCT GRADING OPERATIONS.
10) COMPLETE GRADING AND INSTALL TOPSOIL, SEED AND BLANKET
11) INSTALL UNDERGROUND UTILTIES AND CATCH BASIN INLET PROTECTION.
12) INSTALL ROCK BASE FOR ROADWAY, CONCRETE CURB AND GUTTER AND SIDEWALK.
13) INSTALL BOULEVARD TREES.
14) HYDROSEED OR SEED AND BLANKET DISTURBED AREAS ALONG STREET.
15) PAVE TRAIL AND STREET.
16) CLEAN OUT AND MAINTAIN ANY SEDIMENT FROM SILT FENCING, BIO LOGS AND INLET PROTECTION.

ANY DEWATERING FROM THE SITE WILL REQUIRE THE WATER BE FILTERED THROUGH A 'DANDY BAG' OR EQUAL. WATER SHOULD BE DIRECTED TO THE AREA OF B1 BEHIND THE PROPOSED SILT FENCING OR AS APPROVED BY THE ENGINEER.

N

50 0 50 100 150 FEET

GRAPHIC SCALE

ERICKSON CIVIL
333 North Main Street, Suite 201
Stillwater, Minnesota 55082
Phone (612) 309-3804
www.ericksoncivilsite.com

DRAWING PHASE:

	OWNER REVIEW
	AGENCY REVIEW
	BID DOCUMENT
✓	FOR CONSTRUCTION
	AS-BUILT DOCUMENT

I HEREBY CERTIFY THAT THIS PLAN, SPECIFICATION OR REPORT WAS PREPARED BY ME OR UNDER MY DIRECT SUPERVISION AND THAT I AM A DULY LICENSED PROFESSIONAL ENGINEER UNDER THE LAWS OF THE STATE OF MINNESOTA.

TODD A. ERICKSON, PE
LICENSE NO. 40418
DATE: 04/28/2017

OWNER/DEVELOPER
CHASE DEVELOPMENT
2140 COUNTY ROAD 42 WEST
BURNSVILLE, MN 55337

PROJECT TITLE
EASTON VILLAGE
3RD ADDITION
FINAL PLAN
LAKE ELMO, MINNESOTA

NO.	REVISION DESCRIPTION	DATE
1	City Review	6-21-17

JOB NO. 16-176

SHEET TITLE
EROSION CONTROL PLAN

SHEET NO.
C7

SHEET 7 OF 25

GRADING AND EROSION CONTROL NOTES:

1) SPOT ELEVATIONS ARE ALL GUTTER LINE OR FINISHED ELEVATION UNLESS NOTED OTHERWISE.
2) ELEVATIONS/CONTOURS SHOWN AS FINISHED GRADE ELEVATIONS.
3) REFER TO GEOTECHNICAL REPORT FOR ADDITIONAL REQUIREMENTS.
4) DO NOT SPREAD TOPSOIL WHILE IT IS FROZEN OR MUDDY OR WHEN THE SUBGRADE IS WET OR FROZEN. CORRECT ANY IRREGULARITIES IN THE SURFACE THAT RESULT FROM TOPSOIL SPREADING OR OTHER OPERATIONS TO PREVENT THE FORMATION OF DEPRESSIONS OR WATER POCKETS. BERMING OR DOUBLE LAYERING OR BIO LOG MAY BE REQUIRED TO CONTAIN RUNOFF IF SILT FENCING CANNOT BE INSTALLED PROPERLY DURING FROZEN CONDITIONS.
5) CONTRACTOR SHALL SCHEDULE SOILS TESTING FOR EACH STRUCTURAL FILL AREA, PAD AND STREET AREA.
6) PRIOR TO ROUGH GRADING, INSTALL FIBER ROLLS AND SILT FENCE IN LOCATIONS SHOWN OR AS DIRECTED BY THE ENGINEER OR CITY STAFF.
7) AS EACH AREA OUTSIDE OF THE STREET IS GRADED, PROVIDE 6" OF NATIVE TOPSOIL, SEED AND MULCH ANCHORED WITH A STRAIGHT DISC WITHIN 48 HOURS OF FINE GRADING.
8) SLOPES 3:1 AND GREATER SHALL BE STABILIZED WITH FIBER BLANKET.
9) MAINTAIN AND REPAIR FIBER ROLL AND SILT FENCE (INCLUDING REMOVAL OF ACCUMULATED SILT WITHIN 24 HOURS UPON DETECTION OR NOTIFICATION) UNTIL VEGETATION IS 70% ESTABLISHED.
10) CONTRACTOR TO INSPECT AND DOCUMENT EROSION CONTROL A MINIMUM OF ONCE EVERY SEVEN DAYS AND WITHIN 24 HOURS OF ANY RAIN EVENT GREATER THAN 1/2 INCH IN 24 HOURS AND WITHIN SEVEN DAYS AFTER THAT EVENT.
11) BIO LOG AND SILT FENCE FOUND DAMAGED MUST BE REPAIRED OR REPLACED W/IN 24 HOURS UPON DISCOVERY. REMOVAL OF FIBER ROLL AND SILT FENCE REQUIRED AFTER SITE IS STABILIZED (AT DIRECTION OF ENGINEER).
12) ALL PUBLIC STREETS SHALL BE KEPT FREE OF SEDIMENT AND DEBRIS. ANY SEDIMENT OR DEBRIS DETECTED MUST BE REMOVED WITHIN 24 HOURS OR AS DIRECTED BY CITY.
13) ALL EXPOSED SOIL SHALL BE STABILIZED AS SOON AS POSSIBLE, BUT NO LATER THAN 14 DAYS AFTER CONSTRUCTION ACTIVITY HAS TEMPORARILY OR PERMANENTLY CEASED.
14) ALL PROPOSED AND EXISTING CATCH BASINS WITHIN PROJECT AREA SHALL BE PROVIDED INLET PROTECTION. REGULAR CLEANING OF PROTECTION SHALL OCCUR AND SHALL BE INCLUDED IN THE UNIT PRICE OF INLET PROTECTION.
15) ANY DEBRIS FOUND OR UNEARTHED ON THE SITE SHALL BE THE RESPONSIBILITY OF THE CONTRACTOR FOR DISPOSAL AND PAID FOR AT THE UNIT PRICE PER CU. YD. OF DEBRIS REMOVAL.
16) ON- SITE BURY OF TREES SHALL BE SCRICTLY PROHIBITED. TREES MAY BE BURNED WITH PROPER PERMITTING AND APPROVAL FROM CITY.
17) ALL PIPE OUTFALLS SHALL BE PROTECTED WITH RIPRAP PER CITY DETAIL.
18) ALL CITY STANDARD NOTES AS FOUND ON SHEET C5 SHALL BE FOLLOWED.

CITY STANDARD PLAN NOTES

1. RESTORE ALL DISTURBED AREAS WITH 6 INCHES OF TOPSOIL CONFORMING TO MNDOT 3877.
2. PROTECT ALL STORM SEWER INLETS AS SPECIFIED HEREIN AND MAINTAIN UNTIL STREET CONSTRUCTION IS COMPLETED.
3. MAINTAIN ALL SILT FENCE AND REPAIR OR REPLACE AS NEEDED OR REQUIRED UNTIL TURF HAS BEEN ESTABLISHED.
4. RESTORATION WORK SHALL BEGIN WITHIN 7 DAYS OF FINAL GRADING.
5. A MINIMUM OF 2 ROWS OF SOD SHALL BE PLACED ADJACENT TO THE BACK OF CURBS ALONG ALL BOULEVARDS. SILT FENCE SHALL BE PLACED DIRECTLY BEHIND THE SOD IN ACCORDANCE WITH THE CITY STANDARD DETAILS.
6. BOULEVARD AND DITCH RESTORATION INCLUDES FINE GRADING, WHICH INCLUDES THE REMOVAL OF ROCKS, DEBRIS AND SOIL CHUNKS, WHILE MAINTAINING POSITIVE DRAINAGE.

KEYED NOTES

1. INSTALL SILT FENCE
2. INSTALL MNDOT SPEC. 9" BIO LOG
3. INSTALL EROSION CONTROL BLANKET TYPE CAT. 2 WOOD FIBER
4. INSTALL FLOATING SILT CURTAIN (MNDOT APPROVED)

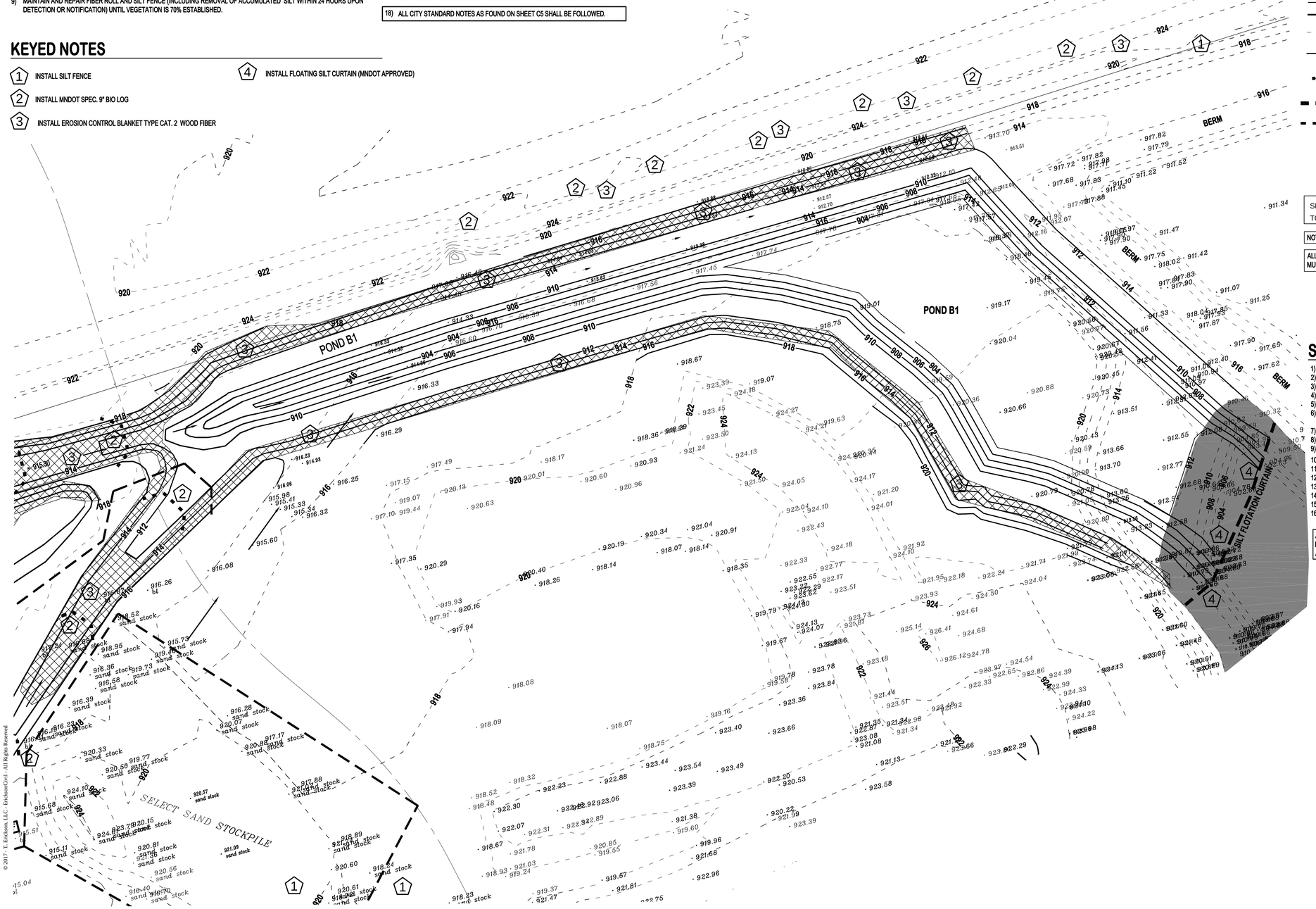

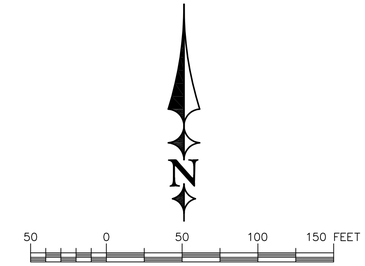

LEGEND

- 3RD ADDITION BOUNDARY
- 920 — EXISTING 2-FT CONTOUR INTERVAL
- 920 — PROPOSED 2-FT CONTOUR INTERVAL
- PROPOSED STORM SEWER (SIZE INDICATED ON PLANS)
- SILT FENCE
- INSTALL DITCH CHECK (MNDOT SPEC. 9" BIO LOG)
- EROSION CONTROL BLANKET (CAT. 2, WOOD FIBER) (CAT. 4 IN BOTTOM OF SWALES)
- 916.29 EXISTING SPOT ELEVATION
- * 914.36 PROPOSED SPOT ELEVATION

SEEDING: 1) LOTS AND OPEN SPACE, LOW GROW FESCUE @ 220 LBS./ACRE.
TOPSOIL: 6" MINIMUM DEPTH, MEETING MNDOT SPEC. FOR TOPSOIL BORROW.

NOTE: ALL SEED SHALL BE DRILLED AND NOT SPREAD.

ALL SEEDING SHALL BE COVERED WITH WEED FREE MN/DOT TYPE 3 MULCH APPLIED @ 2 TONS PER ACRE.

SWPPP SEQUENCING

1) OBTAIN MPCA PERMIT MINIMUM 7 DAYS PRIOR TO STARTING TREE CLEARING ACTIVITIES.
2) INSTALL ROCK CONSTRUCTION ENTRANCE AS SHOWN IN DETAILS.
3) INSTALL SEDIMENT INLET PROTECTION AT EXISTING CATCH BASINS AND MAINTAIN DURING PROJECT.
4) INSTALL SILT FENCING AS SHOWN ON PLAN PRIOR TO ANY SITE DISTURBANCE.
5) MAINTAIN SWPPP MAILBOX WITH A COPY OF THE PLANS, SWPPP AND EROSION CONTROL LOGS.
6) NOTIFY CITY FOR INSPECTION OF PERIMETER EROSION CONTROL MEASURES PRIOR TO STARTING CONSTRUCTION (3 BUSINESS DAY NOTIFICATION REQUIRED).
7) STOCKPILE TOPSOIL AND INSTALL PERIMETER BIO LOG SURROUNDING STOCKPILES REQUIRED
8) SEED TOPSOIL STOCKPILE WITH MINIMUM 20/LBS PER ACRE OATS.
9) CONDUCT GRADING OPERATIONS.
10) COMPLETE GRADING AND INSTALL TOPSOIL, SEED AND BLANKET
11) INSTALL UNDERGROUND UTILTIES AND CATCH BASIN INLET PROTECTION.
12) INSTALL ROCK BASE FOR ROADWAY, CONCRETE CURB AND GUTTER AND SIDEWALK.
13) INSTALL BOULEVARD TREES.
14) HYDROSEED OR SEED AND BLANKET DISTURBED AREAS ALONG STREET.
15) PAVE TRAIL AND STREET.
16) CLEAN OUT AND MAINTAIN ANY SEDIMENT FROM SILT FENCING, BIO LOGS AND INLET PROTECTION.

ANY DEWATERING FROM THE SITE WILL REQUIRE THE WATER BE FILTERED THROUGH A 'DANDY BAG' OR EQUAL. WATER SHOULD BE DIRECTED TO THE AREA OF B1 BEHIND THE PROPOSED SILT FENCING OR AS APPROVED BY THE ENGINEER.

ERICKSON CIVIL
333 North Main Street, Suite 201
Stillwater, Minnesota 55082
Phone (612) 309-3804
www.ericksoncivilsite.com

DRAWING PHASE:

	OWNER REVIEW
	AGENCY REVIEW
	BID DOCUMENT
✓	FOR CONSTRUCTION
	AS-BUILT DOCUMENT

I HEREBY CERTIFY THAT THIS PLAN, SPECIFICATION OR REPORT WAS PREPARED BY ME OR UNDER MY DIRECT SUPERVISION AND THAT I AM A DULY LICENSED PROFESSIONAL ENGINEER UNDER THE LAWS OF THE STATE OF MINNESOTA.

TODD A. ERICKSON, PE
LICENSE NO. 40418
DATE: 04/28/2017

OWNER/DEVELOPER
CHASE DEVELOPMENT
2140 COUNTY ROAD 42 WEST
BURNSVILLE, MN 55337

PROJECT TITLE
EASTON VILLAGE
3RD ADDITION
FINAL PLAN
LAKE ELMO, MINNESOTA

NO.	REVISION DESCRIPTION	DATE
1	City Review	6-21-17

JOB NO. 16-176

SHEET TITLE
EROSION CONTROL PLAN

SHEET NO.
C8

LEGEND

- 3RD ADDITION BOUNDARY
- 1050 — EXISTING 2-FT CONTOUR INTERVAL
- 922.85 LP | HP EOF — HIGH OR LOW POINT OF STREET PROFILE LOCATION AND ELEVATION HP = HIGH POINT, LP = LOW POINT, EOF = EMERGENCY OVERFLOW
- 1050 — PROPOSED 2-FT CONTOUR INTERVAL
- PROPOSED DRAINAGE ARROW
- 0.74% — PROPOSED STREET GRADE PERCENT AND DIRECTION
- 9 — PROPOSED STORM SEWER, STRUCTURES AND NUMBER REF.
- ENGINEERED FILL LIMIT
- 100-YEAR HWL

PAVEMENT HOLD DOWN TABLE

SECTION AREA	HOLD DOWN FOR GRADING
LOCAL STREET	21 INCHES
SIDEWALK	9 INCHES
TRAIL	10.5 INCHES

GRADING NOTES:

1) SPOT ELEVATIONS ARE ALL GUTTER LINE OR FINISHED ELEVATION UNLESS NOTED OTHERWISE.

2) ELEVATIONS/CONTOURS SHOWN AS FINISHED GRADE ELEVATIONS.

3) REFER TO GEOTECHNICAL REPORT FOR ADDITIONAL REQUIREMENTS.

4) DO NOT SPREAD TOPSOIL WHILE IT IS FROZEN OR MUDDY OR WHEN THE SUBGRADE IS WET OR FROZEN. CORRECT ANY IRREGULARITIES IN THE SURFACE THAT RESULT FROM TOPSOIL SPREADING OR OTHER OPERATIONS TO PREVENT THE FORMATION OF DEPRESSIONS OR WATER POCKETS. BERMING OR DOUBLE LAYERING OR FIBER ROLL MAY BE REQUIRED TO CONTAIN RUNOFF IF SILT FENCING CANNOT BE INSTALLED PROPERLY DURING FROZEN CONDITIONS.

5) CONTRACTOR SHALL SCHEDULE SOILS TESTING FOR EACH STRUCTURAL FILL AREA, PAD AND STREET AREA.

6) SEE DETAIL(S) FOR PAD CONSTRUCTION, SHEET C13

7) ALL CITY STANDARD NOTES AS FOUND ON SHEETS C5 SHALL BE FOLLOWED.

ENGINEERED/STRUCTURAL FILL REQUIREMENTS

1) CONTRACTOR SHALL REMOVE TOPSOIL AND ANY ORGANIC MATERIAL AS DIRECTED BY ENGINEER IN ALL AREAS OF ENGINEERED/STRUCTURAL FILL.

2) ANY ENGINEERED/STRUCTURAL FILL MATERIAL SHALL BE COMPACTED IN 8-INCH LIFTS TO A DENSITY OF 98% STANDARD PROCTOR DENSITY.

3) GRANULAR BACKFILL SHALL BE COMPLETELY FREE OF ORGANIC MATERIAL & MAY NOT CONTAIN ANY ROCKS LARGER THAN 3" IN DIAMETER.

4) GRADES SHALL NOT VARY MORE THAT 0.1' FROM GRADING ELEVATIONS SHOWN ON PLANS.

5) TESTING OF PAD AREA SHALL BE COORDINATED BY CONTRACTOR AND TESTING RESULTS SHALL BE DELIVERED TO ENGINEER AND OWNER. COST OF TESTING IS BY OWNER.

6) TESTING OF ENGINEERED/STRUCTURAL FILL IN ROAD AREAS SHALL BE COORDINATED BY CONTRACTOR AND TESTING RESULTS SHALL BE DELIVERED TO OWNER, ENGINEER AND CITY.

7) ANY FAILED COMPACTION SHALL BE REMOVED AND RECOMPACTED AT NO ADDITIONAL EXPENSE TO THE OWNER, EXCEPT FOR TESTING.

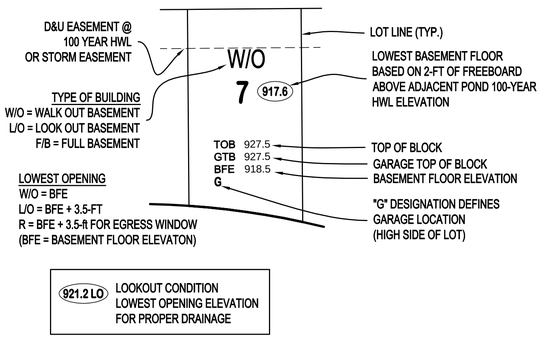

LOT GRADING DETAIL

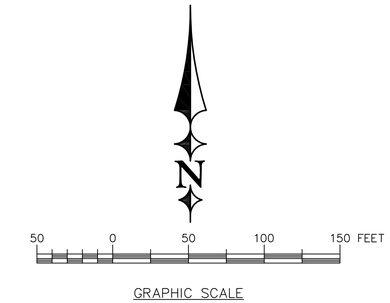

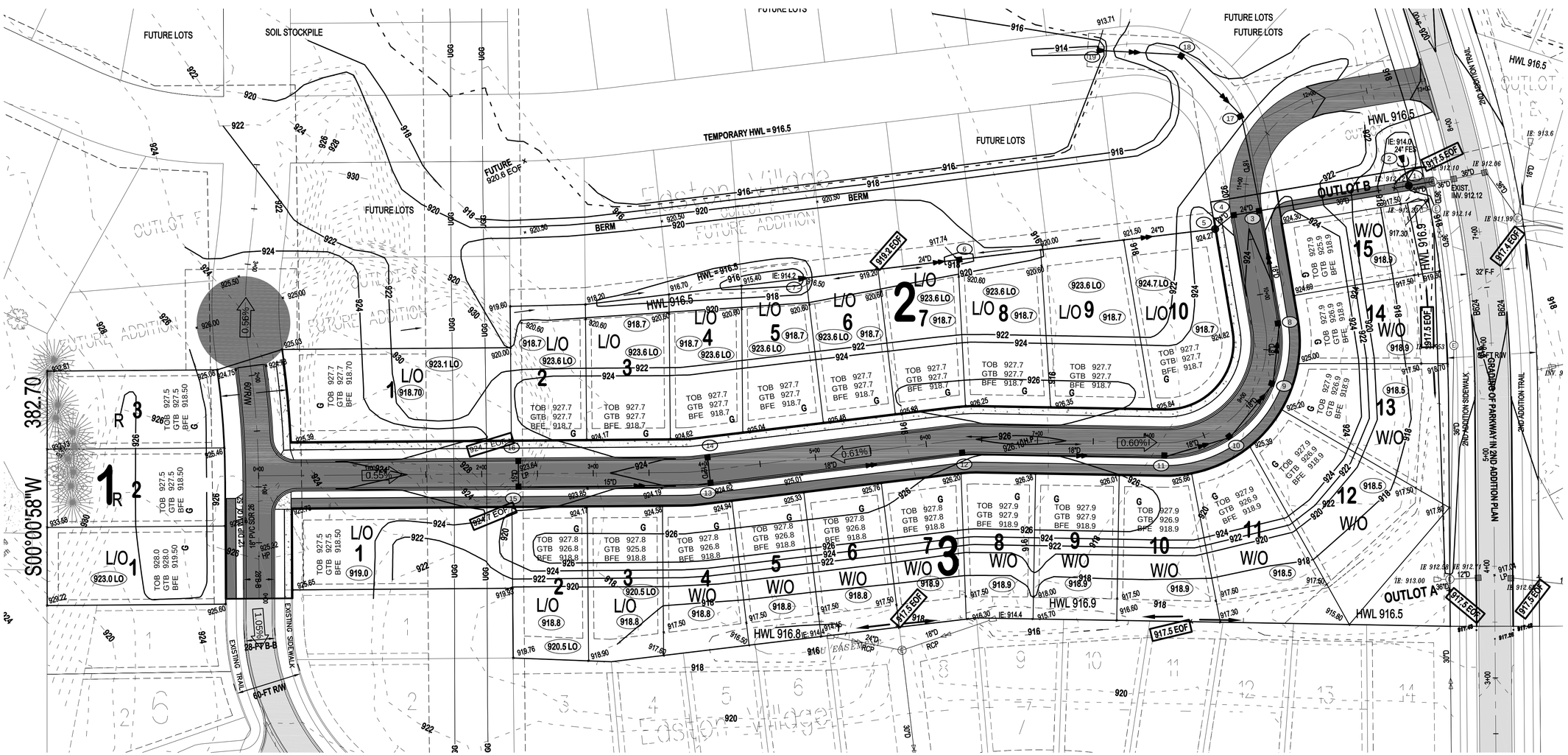

ERICKSON CIVIL
333 North Main Street, Suite 201
Stillwater, Minnesota 55082
Phone (612) 309-3804
www.ericksoncivilsite.com

DRAWING PHASE:

	OWNER REVIEW
	AGENCY REVIEW
	BID DOCUMENT
√	FOR CONSTRUCTION
	AS-BUILT DOCUMENT

I HEREBY CERTIFY THAT THIS PLAN, SPECIFICATION OR REPORT WAS PREPARED BY ME OR UNDER MY DIRECT SUPERVISION AND THAT I AM A DULY LICENSED PROFESSIONAL ENGINEER UNDER THE LAWS OF THE STATE OF MINNESOTA.

TODD A. ERICKSON, PE
LICENSE NO. 40418
DATE: 04/28/2017

OWNER/DEVELOPER
CHASE DEVELOPMENT
2140 COUNTY ROAD 42 WEST
BURNSVILLE, MN 55337

PROJECT TITLE
EASTON VILLAGE
3RD ADDITION
FINAL PLAN
LAKE ELMO, MINNESOTA

NO.	REVISION DESCRIPTION	DATE
1	City Review – Grade Changes	6-21-17

JOB NO. 16-176

SHEET TITLE
GRADING PLAN

SHEET NO.
C9

LEGEND

- 3RD ADDITION BOUNDARY
- 1050 — EXISTING 2-FT CONTOUR INTERVAL
- 922.85 LP / HP EOF — HIGH OR LOW POINT OF STREET PROFILE LOCATION AND ELEVATION HP = HIGH POINT, LP = LOW POINT, EOF = EMERGENCY OVERFLOW
- 1050 — PROPOSED 2-FT CONTOUR INTERVAL
- PROPOSED DRAINAGE ARROW
- 0.74% — PROPOSED STREET GRADE PERCENT AND DIRECTION
- 9 — PROPOSED STORM SEWER, STRUCTURES AND NUMBER REF.
- ENGINEERED FILL LIMIT
- 100-YEAR HWL

GRADING NOTES:

1) SPOT ELEVATIONS ARE ALL GUTTER LINE OR FINISHED ELEVATION UNLESS NOTED OTHERWISE.
2) ELEVATIONS/CONTOURS SHOWN AS FINISHED GRADE ELEVATIONS.
3) REFER TO GEOTECHNICAL REPORT FOR ADDITIONAL REQUIREMENTS.
4) DO NOT SPREAD TOPSOIL WHILE IT IS FROZEN OR MUDDY OR WHEN THE SUBGRADE IS WET OR FROZEN. CORRECT ANY IRREGULARITIES IN THE SURFACE THAT RESULT FROM TOPSOIL SPREADING OR OTHER OPERATIONS TO PREVENT THE FORMATION OF DEPRESSIONS OR WATER POCKETS. BERMING OR DOUBLE LAYERING OR FIBER ROLL MAY BE REQUIRED TO CONTAIN RUNOFF IF SILT FENCING CANNOT BE INSTALLED PROPERLY DURING FROZEN CONDITIONS.
5) CONTRACTOR SHALL SCHEDULE SOILS TESTING FOR EACH STRUCTURAL FILL AREA, PAD AND STREET AREA.
6) SEE DETAIL(S) FOR PAD CONSTRUCTION, SHEET C13
7) ALL CITY STANDARD NOTES AS FOUND ON SHEETS C5 SHALL BE FOLLOWED.
8) UTILIZE CITY STANDARD DETAIL 416 FOR POND TYPICAL SECTION.
9) GRADE POND TO MAXIMUM 3:1 SIDE SLOPES, WITH 20-FT 10:1 AQUATIC AND MAINTENANCE BENCH.

NOTIFY NORTHERN NATURAL GAS PRIOR TO ANY DISTURBANCE AT CROSSING - 1-(888) 367-6671

NOTE: ELEVATION SHALL BE FLAT (917.2) ACROSS ENTIRE 50-FT OVERFLOW FOR PROTECTION OF GAS MAIN CROSSING.

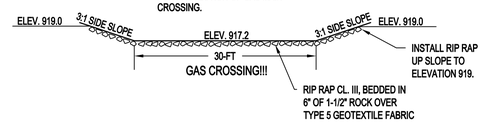

RIP RAP OVERFLOW DETAIL

50 0 50 100 150 FEET

GRAPHIC SCALE

N

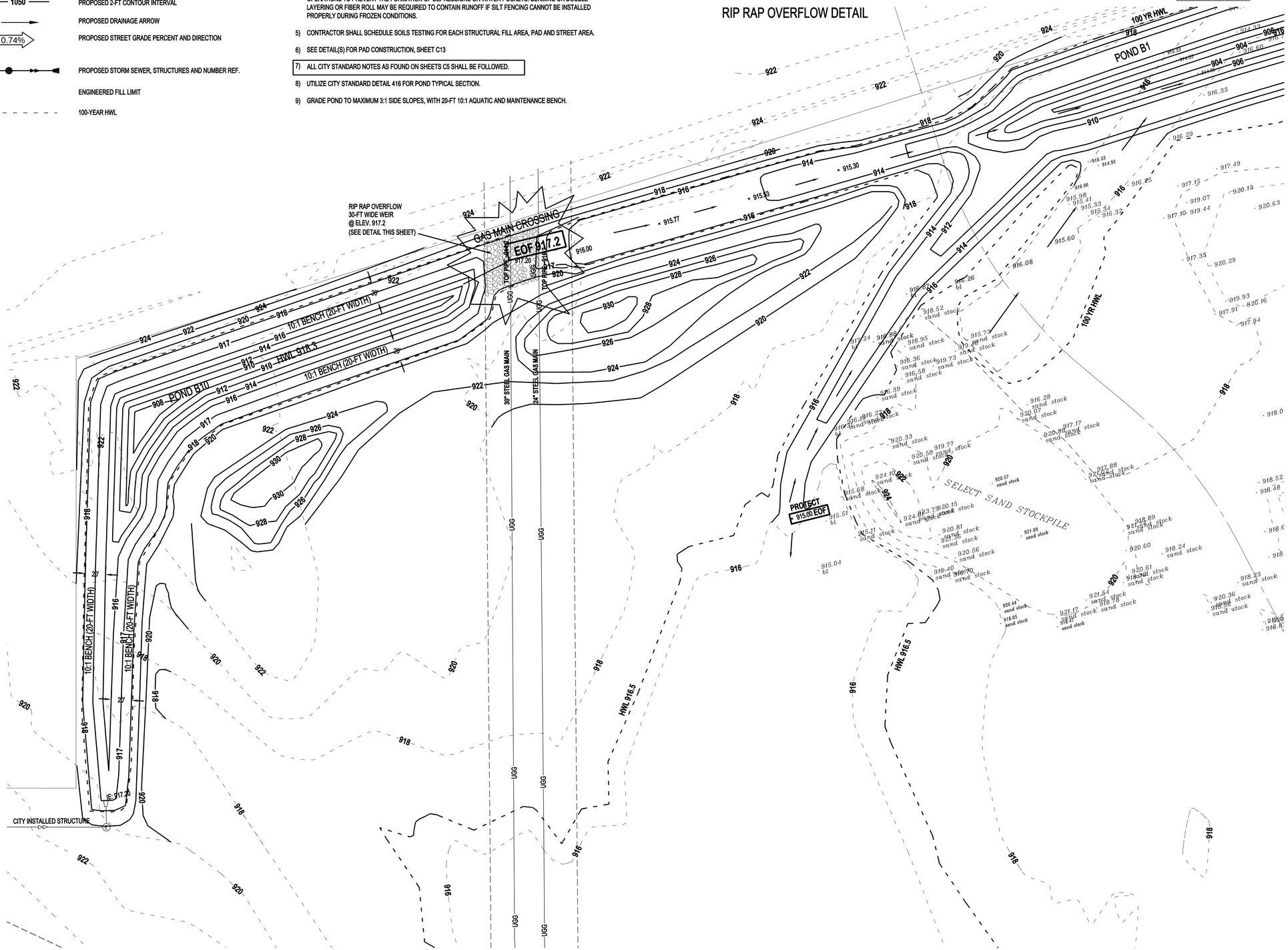

ERICKSON CIVIL
333 North Main Street, Suite 201
Stillwater, Minnesota 55082
Phone (612) 309-3804
www.ericksoncivilsite.com

DRAWING PHASE:

	OWNER REVIEW
	AGENCY REVIEW
	BID DOCUMENT
✓	FOR CONSTRUCTION
	AS-BUILT DOCUMENT

I HEREBY CERTIFY THAT THIS PLAN, SPECIFICATION OR REPORT WAS PREPARED BY ME OR UNDER MY DIRECT SUPERVISION AND THAT I AM A DULY LICENSED PROFESSIONAL ENGINEER UNDER THE LAWS OF THE STATE OF MINNESOTA.

TODD A. ERICKSON, PE

LICENSE NO. 40418

DATE: 04/28/2017

OWNER/DEVELOPER
CHASE DEVELOPMENT
2140 COUNTY ROAD 42 WEST
BURNSVILLE, MN 55337

PROJECT TITLE
EASTON VILLAGE
3RD ADDITION
FINAL PLAN
LAKE ELMO, MINNESOTA

NO.	REVISION DESCRIPTION	DATE
1	City Review	6-21-17

JOB NO. 16-176

SHEET TITLE
GRADING PLAN

SHEET NO.
C10

SHEET 10 OF 25

LEGEND

- 3RD ADDITION BOUNDARY
- 1050 — EXISTING 2-FT CONTOUR INTERVAL
- × 922.85 LP / HP EOF — HIGH OR LOW POINT OF STREET PROFILE LOCATION AND ELEVATION HP = HIGH POINT, LP = LOW POINT, EOF = EMERGENCY OVERFLOW
- 1050 — PROPOSED 2-FT CONTOUR INTERVAL
- PROPOSED DRAINAGE ARROW
- 0.74% — PROPOSED STREET GRADE PERCENT AND DIRECTION
- 9 — PROPOSED STORM SEWER, STRUCTURES AND NUMBER REF.
- ENGINEERED FILL LIMIT
- 100-YEAR HWL

GRADING NOTES:

1) SPOT ELEVATIONS ARE ALL GUTTER LINE OR FINISHED ELEVATION UNLESS NOTED OTHERWISE.
2) ELEVATIONS/CONTOURS SHOWN AS FINISHED GRADE ELEVATIONS.
3) REFER TO GEOTECHNICAL REPORT FOR ADDITIONAL REQUIREMENTS.
4) DO NOT SPREAD TOPSOIL WHILE IT IS FROZEN OR MUDDY OR WHEN THE SUBGRADE IS WET OR FROZEN. CORRECT ANY IRREGULARITIES IN THE SURFACE THAT RESULT FROM TOPSOIL SPREADING OR OTHER OPERATIONS TO PREVENT THE FORMATION OF DEPRESSIONS OR WATER POCKETS. BERMING OR DOUBLE LAYERING OR FIBER ROLL MAY BE REQUIRED TO CONTAIN RUNOFF IF SILT FENCING CANNOT BE INSTALLED PROPERLY DURING FROZEN CONDITIONS.
5) CONTRACTOR SHALL SCHEDULE SOILS TESTING FOR EACH STRUCTURAL FILL AREA, PAD AND STREET AREA.
6) SEE DETAIL(S) FOR PAD CONSTRUCTION, SHEET C13
7) ALL CITY STANDARD NOTES AS FOUND ON SHEETS C5 SHALL BE FOLLOWED.
8) UTILIZE CITY STANDARD DETAIL 416 FOR POND TYPICAL SECTION.
9) GRADE POND TO MAXIMUM 3:1 SIDE SLOPES, WITH 20-FT 10:1 AQUATIC AND MAINTENANCE BENCH.

N

50 0 50 100 150 FEET

GRAPHIC SCALE

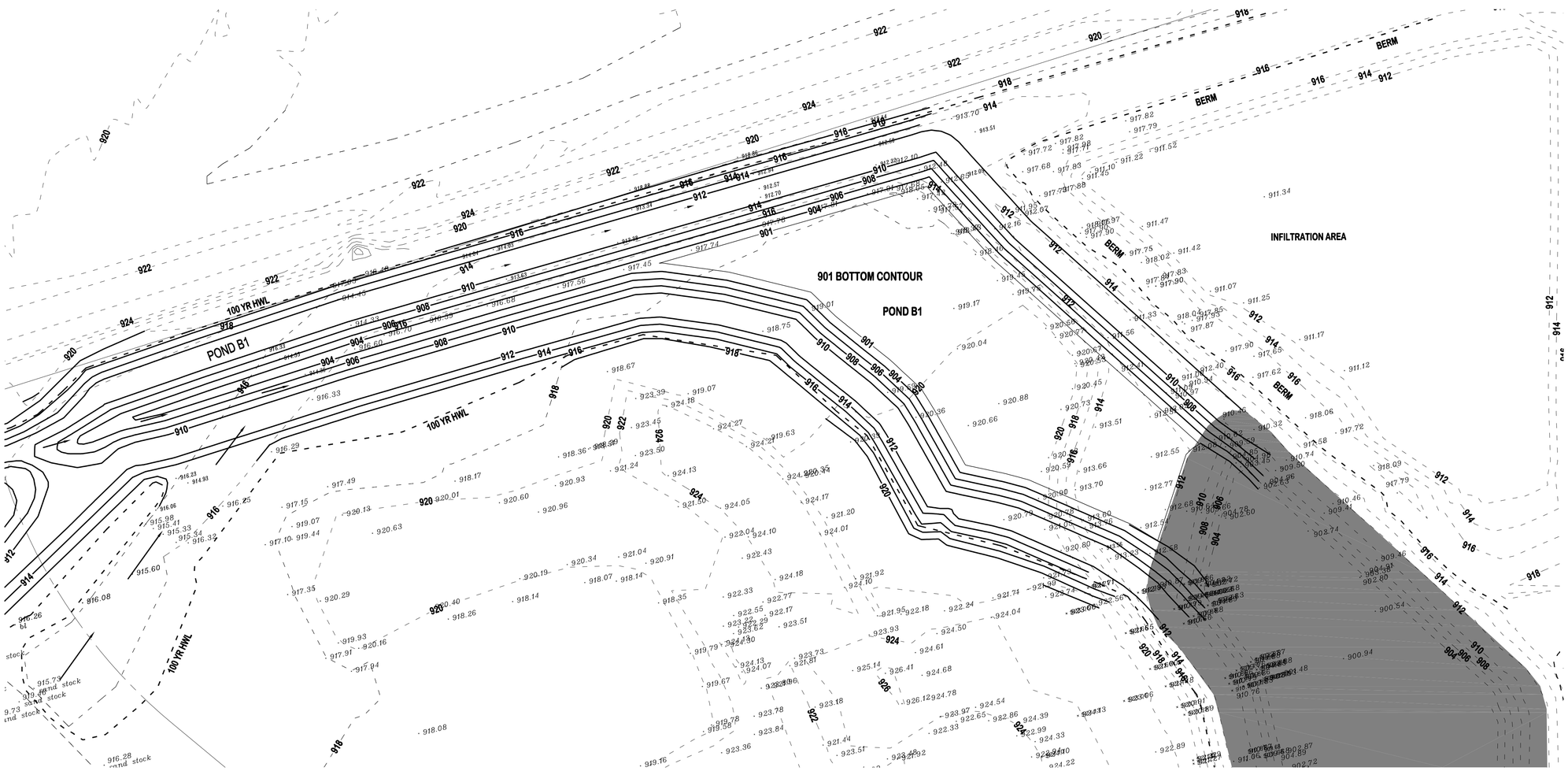

ERICKSON CIVIL
333 North Main Street, Suite 201
Stillwater, Minnesota 55082
Phone (612) 309-3804
www.ericksoncivilsite.com

DRAWING PHASE:

	OWNER REVIEW
	AGENCY REVIEW
	BID DOCUMENT
✓	FOR CONSTRUCTION
	AS-BUILT DOCUMENT

I HEREBY CERTIFY THAT THIS PLAN, SPECIFICATION OR REPORT WAS PREPARED BY ME OR UNDER MY DIRECT SUPERVISION AND THAT I AM A DULY LICENSED PROFESSIONAL ENGINEER UNDER THE LAWS OF THE STATE OF MINNESOTA.

TODD A. ERICKSON, PE

LICENSE NO. 40418

DATE: 04/28/2017

OWNER/DEVELOPER
CHASE DEVELOPMENT
2140 COUNTY ROAD 42 WEST
BURNSVILLE, MN 55337

PROJECT TITLE
EASTON VILLAGE
3RD ADDITION
FINAL PLAN
LAKE ELMO, MINNESOTA

NO.	REVISION DESCRIPTION	DATE
1	City Review	6-21-17

JOB NO. 16-176

SHEET TITLE
GRADING PLAN

SHEET NO.
C11

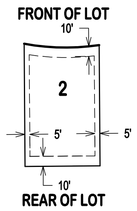

TYPICAL EASEMENT DETAIL

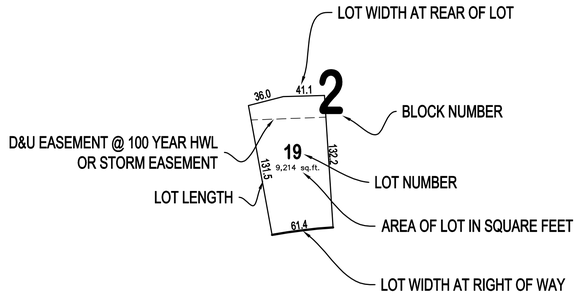

TYPICAL LOT DETAIL

Development Standards

FRONT SETBACK	25'
GARAGE SIDE SETBACK	7.5'
SIDE SETBACK (CORNER LOTS)	15'
HOUSE SIDE SETBACK	7.5'
REAR SETBACK	20'
TYPICAL LOT WIDTH:	65'
TYPICAL LOT DEPTH:	130'
SIDE YARD EASEMENT:	5' *
FRONT AND REAR EASEMENT:	10' *

MIN. BASEMENT ELEVATION ABOVE 100 YEAR HWL: 2'

* UNLESS SHOWN ON PRELIMINARY LAYOUT

NOTE: DRAINAGE AND UTILITY EASEMENTS SHOWN FOR 100-YEAR HWL OF PONDING AREAS

Legend

- 3RD ADDITION BOUNDARY
- 15-FT POLE WITH ORNAMENTAL LIGHT, XCEL ENERGY "ACRON" LAMP.
- UTILITY EASEMENT
- HOUSE SETBACK
- PROPOSED STREET SIGN
- 1ST AND 2ND ADDITION BITUMINOUS PAVEMENT
- 3RD ADDITION PROPOSED BITUMINOUS PAVEMENT
- PROPOSED CONCRETE SIDEWALK/RAMP

CITY STANDARD PLAN NOTES

1. STREET LIGHTING SHALL BE INSTALLED PER CITY STANDARDS 5 FEET BACK OF CURB IN LOCATIONS SHOWN ON PLAN.
2. ALL SIGNS MUST MEET MMUTCD.
3. ALL SIGN SHEATHING TO BE TYPE IX DIAMOND GRADE (DG3).
4. SIGN POSTS TO BE SQUARE TUBE SIGN STANDARD WITH OMNI BASE.
5. DEVELOPER TO FURNISH AND INSTALL STREET SIGNS PER CITY STANDARDS.
6. POLY PREFORMED PAVEMENT MATERIAL SHALL BE USED FOR ALL PAVEMENT SYMBOLS.
7. EPOXY RESIN AND DROP-ON GLASS BEADS FOR PAVEMENT MARKINGS SHALL MEET THE REQUIREMENTS OF MnDOT "SPECIFICATIONS FOR CONSTRUCTION, 2014 EDITIONS".

1. 4. SIGN POSTS TO BE SQUARE TUBE SIGN STANDARD WITH OMNI BASE.
2. 5. DEVELOPER TO FURNISH AND INSTALL STREET SIGNS PER CITY STANDARDS.
3. 6. POLY PREFORMED PAVEMENT MATERIAL SHALL BE USED FOR ALL PAVEMENT SYMBOLS.
4. 7. EPOXY RESIN AND DROP-ON GLASS BEADS FOR PAVEMENT MARKINGS SHALL MEET THE REQUIREMENTS OF MnDOT "SPECIFICATIONS FOR CONSTRUCTION, 2014 EDITIONS".
5. DEVELOPER TO FURNISH AND INSTALL STREET SIGNS PER CITY STANDARDS.
6. POLY PREFORMED PAVEMENT MATERIAL SHALL BE USED FOR ALL PAVEMENT SYMBOLS.
7. EPOXY RESIN AND DROP-ON GLASS BEADS FOR PAVEMENT MARKINGS SHALL MEET THE REQUIREMENTS OF MnDOT "SPECIFICATIONS FOR CONSTRUCTION, 2014 EDITIONS".
7. EPOXY RESIN AND DROP-ON GLASS BEADS FOR PAVEMENT MARKINGS SHALL MEET THE REQUIREMENTS OF MnDOT "SPECIFICATIONS FOR CONSTRUCTION, 2014 EDITIONS".

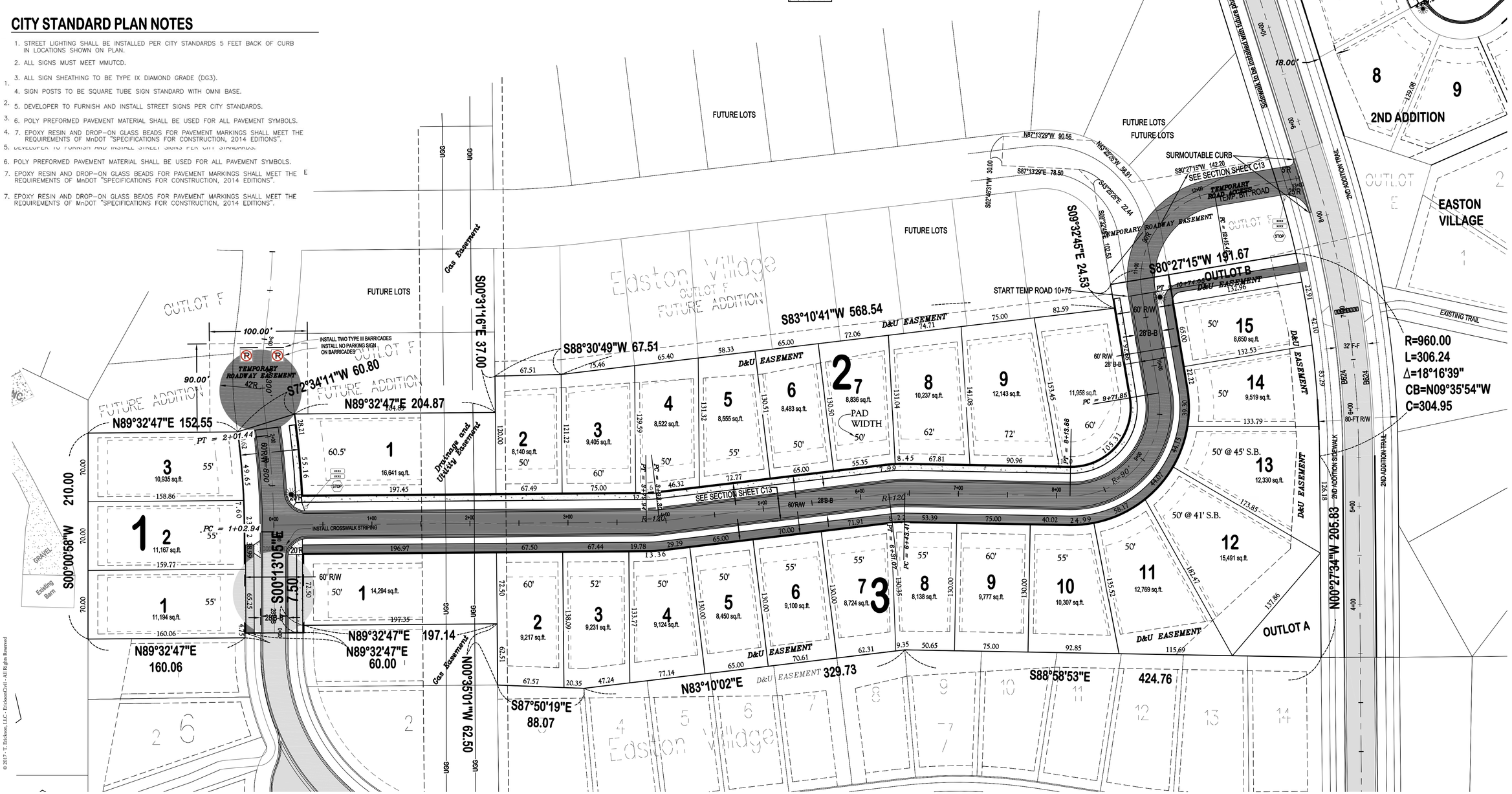

ERICKSON CIVIL
333 North Main Street, Suite 201
Stillwater, Minnesota 55082
Phone (612) 309-3804
www.ericksoncivilsite.com

DRAWING PHASE:

	OWNER REVIEW
	AGENCY REVIEW
	BID DOCUMENT
✓	FOR CONSTRUCTION
	AS-BUILT DOCUMENT

I HEREBY CERTIFY THAT THIS PLAN, SPECIFICATION OR REPORT WAS PREPARED BY ME OR UNDER MY DIRECT SUPERVISION AND THAT I AM A DULY LICENSED PROFESSIONAL ENGINEER UNDER THE LAWS OF THE STATE OF MINNESOTA.

TODD A. ERICKSON, PE

LICENSE NO. 40418

DATE: 04/28/2017

OWNER/DEVELOPER

CHASE DEVELOPMENT
2140 COUNTY ROAD 42 WEST
BURNSVILLE, MN 55337

PROJECT TITLE

EASTON VILLAGE
3RD ADDITION
FINAL PLAN
LAKE ELMO, MINNESOTA

NO.	REVISION DESCRIPTION	DATE
1	City Review	6-21-17

JOB NO. 16-176

SHEET TITLE
SITE LAYOUT, LIGHTING AND SIGNING PLAN

SHEET NO.
C12

SHEET 12 OF 25

PLAN VIEW - LILAC AVENUE NORTH

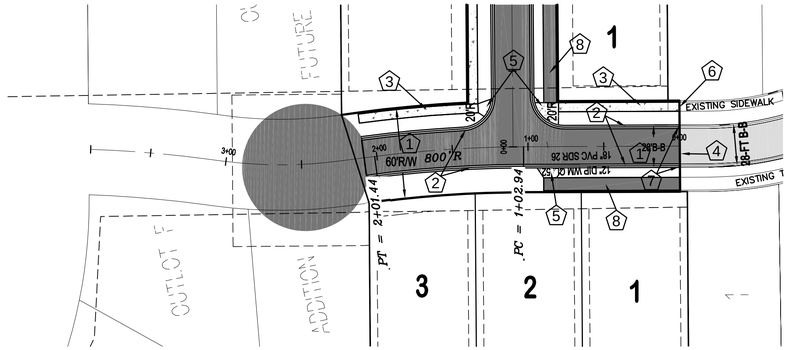

PROFILE VIEW - LILAC AVENUE NORTH

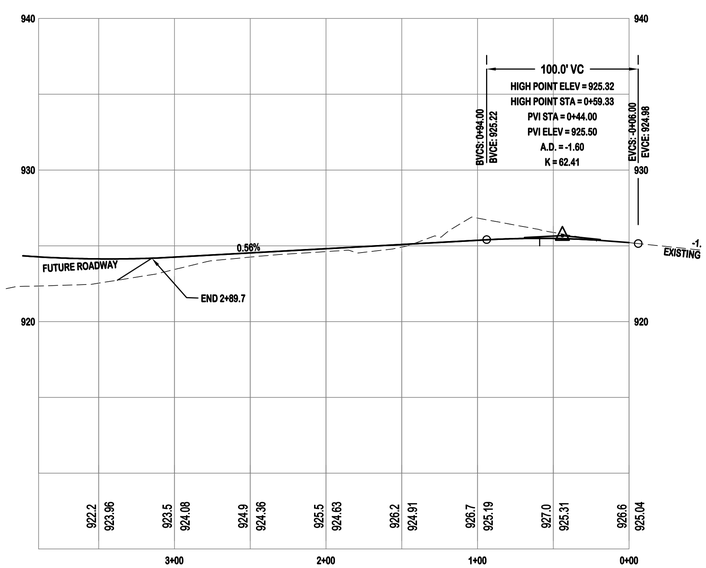

5 FEET
0
VERTICAL
GRAPHIC SCALE

50 0 50 100 150 FEET
GRAPHIC SCALE

Legend

- EXISTING BITUMINOUS PAVEMENT
- PROPOSED BITUMINOUS PAVEMENT
- PROPOSED CONCRETE SIDEWALK/RAMP

Layout Notes

1) ALL RADII TO BACK OF CURB
2) ALL DIMENSIONS TO THE FACE OF CURB UNLESS NOTED OTHERWISE.

Keyed Notes

1. INSTALL BITUMINOUS PAVEMENT PER CITY STANDARD PLATE NO. 801.
2. INSTALL SURMOUNTABLE CONCRETE CURB AND GUTTER PER CITY STANDARD PLATE NO. 501.
3. INSTALL CONCRETE SIDEWALK PER CITY STANDARD PLATE NO. 510.
4. CONNECT TO EXISTING ROADWAY
5. INSTALL ACCESSIBLE CONCRETE RAMP PER CITY STANDARD PLATE NO'S. 507A & 508.
6. CONNECT TO EXISTING CONCRETE SIDEWALK, INSTALL (3) 12" #4 EPOXY REBAR, 1-FT O.C., 4" DEPTH INTO EXISTING SIDEWALK
7. CONNECT TO EXISTING CONCRETE CURB, INSTALL (2) 12" #4 EPOXY REBAR, 6" O.C., 4" DEPTH INTO EXISTING CURB.
8. INSTALL BIT. TRAIL PER CITY STANDARD PLATE NO. 509

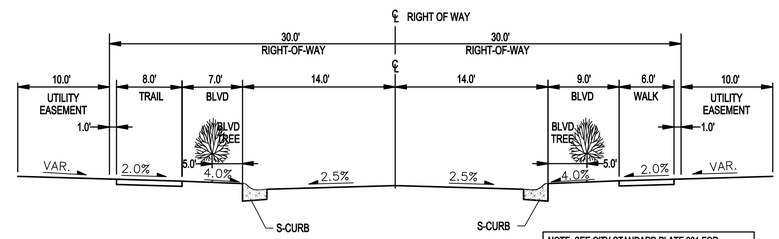

LOCAL ROAD W/TRAIL AND SIDEWALK

LILAC AVENUE NORTH

NOTE: SEE CITY STANDARD PLATE 801 FOR PLACEMENT OF BASE MATERIAL UNDER CURB AND GUTTER.

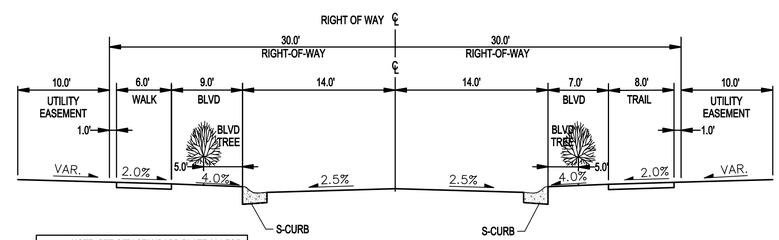

NOTE: SEE CITY STANDARD PLATE 801 FOR PLACEMENT OF BASE MATERIAL UNDER CURB AND GUTTER.

LOCAL ROAD W/TRAIL AND SIDEWALK

33RD STREET NORTH

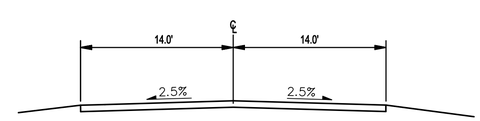

TEMPORARY ROAD TYPICAL

USE SAME BIT. SECTION AS TEMP CUL DE SAC

ERICKSON CIVIL
333 North Main Street, Suite 201
Stillwater, Minnesota 55082
Phone (612) 309-3804
www.ericksoncivilsite.com

DRAWING PHASE:

	OWNER REVIEW
	AGENCY REVIEW
	BID DOCUMENT
✓	FOR CONSTRUCTION
	AS-BUILT DOCUMENT

I HEREBY CERTIFY THAT THIS PLAN, SPECIFICATION OR REPORT WAS PREPARED BY ME OR UNDER MY DIRECT SUPERVISION AND THAT I AM A DULY LICENSED PROFESSIONAL ENGINEER UNDER THE LAWS OF THE STATE OF MINNESOTA.

TODD A. ERICKSON, PE

40418

LICENSE NO.

04/28/2017

DATE:

OWNER/DEVELOPER

CHASE DEVELOPMENT
2140 COUNTY ROAD 42 WEST
BURNSVILLE, MN 55337

PROJECT TITLE

EASTON VILLAGE
3RD ADDITION
FINAL PLAN
LAKE ELMO, MINNESOTA

NO.	REVISION DESCRIPTION	DATE
1	City Review	6-21-17

JOB NO. 16-176

SHEET TITLE

STREET PLAN & PROFILE

SHEET NO.

C13

SHEET 13 OF 25

PLAN VIEW - 33RD STREET NORTH

PROFILE VIEW - 33RD STREET NORTH

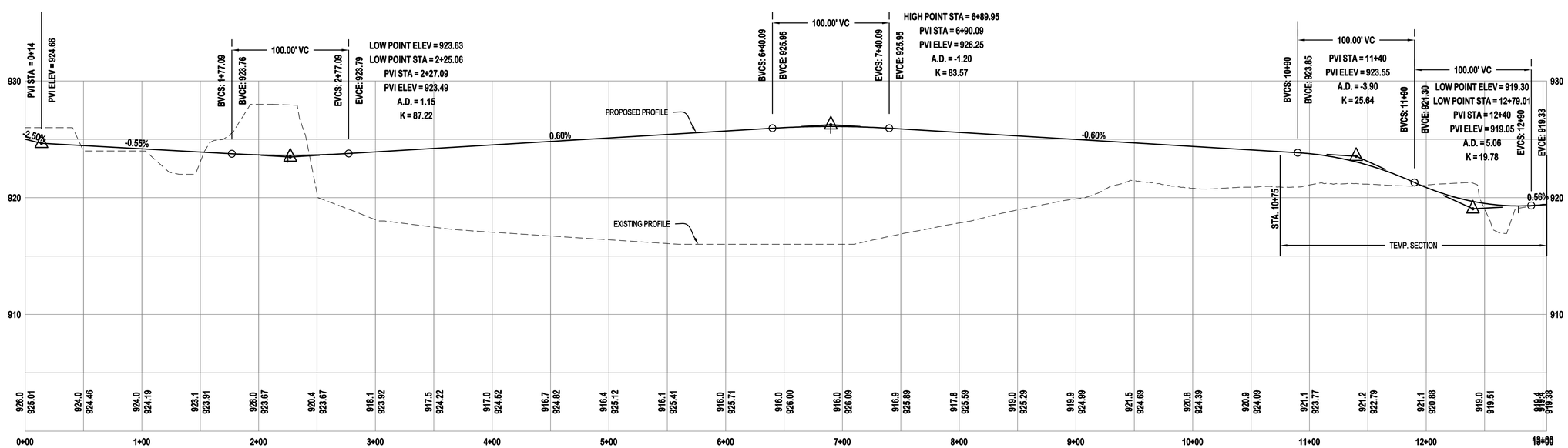

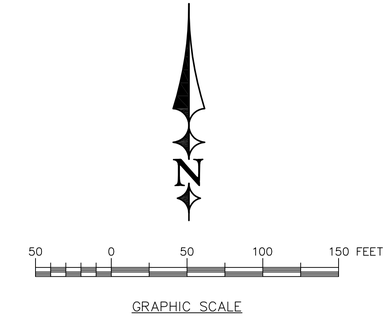

Legend

- 1ST AND 2ND ADDITION PAVEMENT
- 3RD ADDITION PROPOSED BITUMINOUS PAVEMENT
- PROPOSED CONCRETE SIDEWALK/RAMP

Layout Notes

1) ALL RADII TO BACK OF CURB
2) ALL DIMENSIONS TO THE FACE OF CURB UNLESS NOTED OTHERWISE.

Keyed Notes

1. INSTALL BITUMINOUS PAVEMENT PER CITY STANDARD PLATE NO. 801.
2. INSTALL SURMOUNTABLE CONCRETE CURB AND GUTTER PER CITY STANDARD PLATE NO. 501.
3. INSTALL 4" CONCRETE SIDEWALK PER CITY STANDARD PLATE NO. 510.
4. TEMPORARY ROAD EASEMENT
5. INSTALL ACCESSIBLE CONCRETE RAMP PER CITY STANDARD PLATE NO'S. 507A & 508.
6. INSTALL TEMP. ROADWAY SECTION (2" BIT. BASE OVER 6" CL. 5 AGGREGATE)

ERICKSON CIVIL
333 North Main Street, Suite 201
Stillwater, Minnesota 55082
Phone (612) 309-3804
www.ericksoncivilsite.com

DRAWING PHASE:

	OWNER REVIEW
	AGENCY REVIEW
	BID DOCUMENT
✓	FOR CONSTRUCTION
	AS-BUILT DOCUMENT

I HEREBY CERTIFY THAT THIS PLAN, SPECIFICATION OR REPORT WAS PREPARED BY ME OR UNDER MY DIRECT SUPERVISION AND THAT I AM A DULY LICENSED PROFESSIONAL ENGINEER UNDER THE LAWS OF THE STATE OF MINNESOTA.

TODD A. ERICKSON, PE

LICENSE NO. 40418

DATE: 04/27/2017

OWNER/DEVELOPER
CHASE DEVELOPMENT
2140 COUNTY ROAD 42 WEST
BURNSVILLE, MN 55337

PROJECT TITLE
EASTON VILLAGE
3RD ADDITION
FINAL PLAN
LAKE ELMO, MINNESOTA

NO.	REVISION DESCRIPTION	DATE
1	City Review	6-21-17

JOB NO. 16-176

SHEET TITLE
STREET PLAN & PROFILE

SHEET NO.
C14

SHEET 14 OF 25

PLAN VIEW - SANITARY SEWER (LILAC AVENUE)

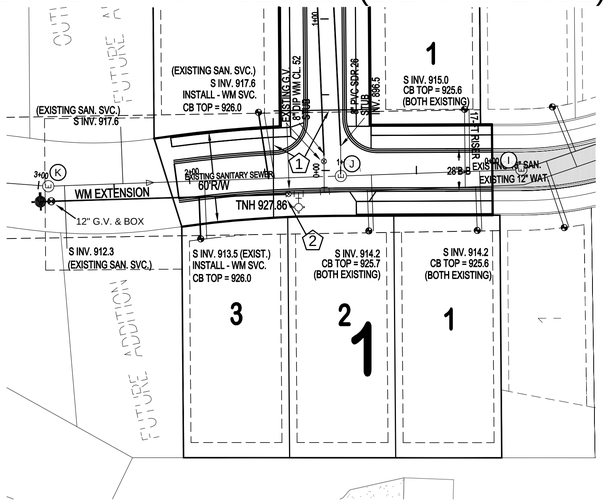

PROFILE VIEW - SANITARY SEWER (LILAC AVENUE)

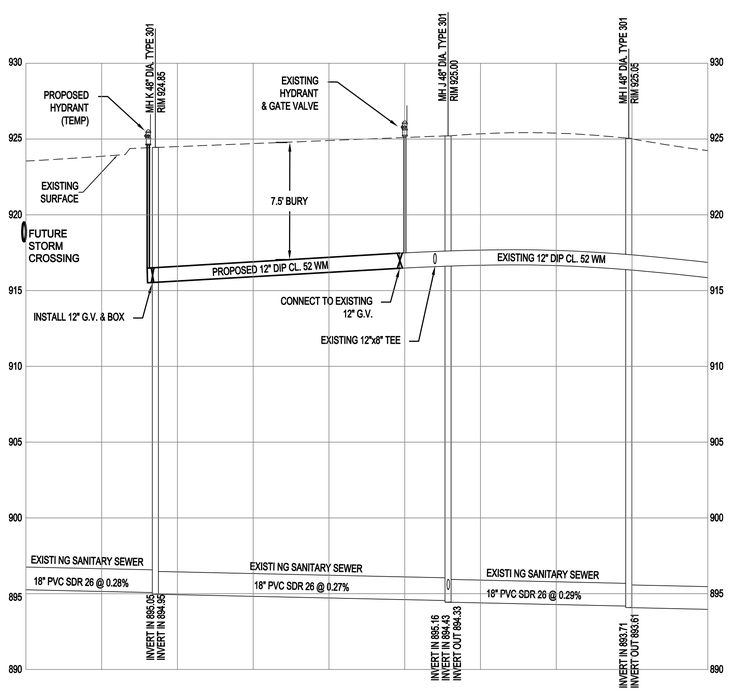

5 FEET
0
VERTICAL GRAPHIC SCALE

50 0 50 100 150 FEET
GRAPHIC SCALE

Keyed Notes

1. INSTALL SMALL UTILITY CROSSING (3) 4" CONDUITS (SUPPLIED BY OTHERS)
2. CONNECT TO EXISTING WATER MAIN AND EXTEND.

Notes

1) SEE DETAIL SHEETS FOR SPECIFIC REQUIREMENTS FOR UTILITY INSTALLATION.
2) ALL UTILITIES SHALL BE INSTALLED PER CITY OF LAKE ELMO DETAILS AND SPECIFICATIONS.
3) TRACER WIRE IS REQUIRED ON ALL SANITARY SEWER MAIN LINE AND SERVICES.

Legend

- 3RD ADDITION BOUNDARY
- PROPOSED 8" PVC (SDR 35 OR 26) SANITARY SEWER
- PROPOSED RCP STORM SEWER
- PROPOSED 8" DIP WM CL. 52 WATER MAIN, HYDRANT AND GATE VALVE
- PROPOSED SANITARY SEWER AND WATER SERVICE (SANITARY SERVICE - 4" PVC (SCH. 40) AND WATER SERVICE - 1" TYPE "K" COPPER WITH CURB STOP)
- PROPOSED RIGID PERFORATED 4" PVC DRAIN TILE WITH SOCK (REQUIRED 100-FT EACH SIDE OF LOW POINT CATCH BASINS OR AS SHOWN). PROVIDE CLEAN OUT AT END OF PIPE.
- UGG — EXISTING UNDERGROUND GAS LINE
- EXISTING STORM SEWER
- EXISTING WATERMAIN
- EXISTING SANITARY SEWER

City Standard Plan Notes

WATERMAIN

1. ALL WATERMAIN AND ACCESSORIES MUST BE CONSTRUCTED IN ACCORDANCE WITH THE CITY OF LAKE ELMO STANDARD SPECIFICATIONS AND DETAILS.
2. MANIPULATION OF EXISTING VALVES SHALL BE PERFORMED ONLY BY CITY PERSONNEL.
3. WATERMAIN SHALL BE DUCTILE IRON PIPE, CLASS-52.
4. ALL FITTINGS SHALL COMPLY WITH CEAM SPEC. 2611.2.A.1. ALL FITTINGS SHALL BE DUCTILE IRON PIPE WITH POLYETHYLENE ENCASEMENT. ALL CONNECTIONS SHALL BE INSTALLED UTILIZING COR-BLUE NUTS & BOLTS.
5. USE GATE VALVES FOR ALL APPLICATIONS UP THROUGH 12 INCHES.
6. GATE VALVES SHALL BE RESILIENT WEDGE AMERICAN FLOW CONTROL SERIES 2500 OR APPROVED EQUAL. GATE VALVES MUST COMPLY WITH CEAM SPEC 2611.2, C.2.
7. USE BUTTERFLY VALVES FOR ALL APPLICATIONS GREATER THAN 12 INCHES.
8. BUTTERFLY VALVES SHALL BE MUELLER LINESEAL III, OR APPROVED EQUAL. BUTTERFLY VALVES SHALL COMPLY WITH CEAM SPEC. 2611.2, C.3.
9. BOLTS AND NUTS ON ALL VALVES AND HYDRANTS SHALL BE STAINLESS STEEL.
10. ALL HYDRANTS SHALL BE INSTALLED 5.0 FEET BACK OF CURB.
11. HYDRANTS SHALL BE WATEROUS "PACER," MODEL WB-67 OR APPROVED EQUAL, FITTED WITH FH 800 SERIES FLEX STAKE AND PAINTED RED.
12. HYDRANTS SHALL HAVE TWO OUTLET NOZZLES FOR 2-1/2 (I.D.) HOSE CONNECTIONS AND ONE 4" STORZ NOZZLE.
13. THE CURB STOP SERVICE ASSEMBLY SHALL HAVE A MINIMUM 1-FT ADJUSTMENT RANGE AND SHALL EXTEND 6 INCHES ABOVE FINISHED GRADE FULLY EXTENDED.
14. THE CONTRACTOR SHALL BE RESPONSIBLE FOR PROVIDING WATER TO HOMES AND BUSINESSES WHOSE WATER SUPPLY IS DISRUPTED DURING THE COURSE OF THE PROJECT.

SANITARY SEWER

1. ALL SANITARY SEWER AND ACCESSORIES MUST BE CONSTRUCTED IN ACCORDANCE WITH THE CITY OF LAKE ELMO STANDARD SPECIFICATIONS AND DETAILS.
2. ALL SANITARY SEWER PVC PIPE SHALL BE INSTALLED ACCORDING TO CITY STANDARD DRAWING 105 "GRANULAR MATERIAL BEDDING METHOD (FOR PVC SANITARY SEWER PIPE).
3. UNLESS NOTED OTHERWISE, ALL SMOOTH WALLED SANITARY SEWER PVC PIPE AND FITTINGS SHALL BE SDR 35 WITH ELASTOMERIC GASKETED JOINTS.
4. ALL SANITARY SEWER SERVICES SHALL BE 4-INCH PVC, SCH. 40 OR SDR 26 PIPE.
5. SMOOTH WALLED PVC PIPE AND FITTINGS SHALL CONFORM WITH THE REQUIREMENTS OF ASTM D-3034 FOR THE SIZE, STANDARD DIMENSION RATIO (SDR), AND STRENGTH REQUIREMENTS INDICATED ON THE PLANS, SPECIFICATIONS, AND SPECIAL PROVISIONS.
6. REINFORCED CONCRETE PIPE AND FITTINGS SHALL CONFORM WITH THE REQUIREMENTS OF MnDOT SPEC 3236 (REINFORCED CONCRETE PIPE) FOR THE TYPE, SIZE, AND STRENGTH CLASS SPECIFIED HEREIN.
7. JOINTS OF MANHOLE RISER SECTIONS SHALL BE TONGUE AND GROOVE WITH RUBBER "O" RING JOINTS PROVIDED ON ALL SANITARY SEWER MANHOLES.
8. SANITARY SEWER INLET AND OUTLET PIPES SHALL BE JOINED TO THE MANHOLE WITH A GASKETED, FLEXIBLE, WATERTIGHT CONNECTION TO ALLOW DIFFERENTIAL SETTLEMENT OF THE PIPE AND MANHOLE TO TAKE PLACE.
9. A 1'-0" TO 1'-4" MANHOLE SECTION SHALL BE INSTALLED UNDER THE CONE SECTION TO ALLOW FOR HEIGHT ADJUSTMENT WHENEVER POSSIBLE.
10. ALL SERVICE LINE STUBS MUST HAVE A 2"x2" HARDWOOD MARKER WITH METAL SPIKE RUNNING FROM THE END OF PIPE TO FINISHED GRADE ELEVATION.
11. UPON MAKING A CONNECTION TO AN EXISTING SANITARY SEWER STUB OR MANHOLE, DIRT AND DEBRIS SHALL BE PREVENTED FROM ENTERING THE EXISTING SEWER BY IMMEDIATELY INSTALLING WATERTIGHT PLUGS AS NEEDED IN THE EXISTING MANHOLE.

ERICKSON CIVIL
333 North Main Street, Suite 201
Stillwater, Minnesota 55082
Phone (612) 309-3804
www.ericksoncivilsite.com

DRAWING PHASE:
- OWNER REVIEW
- AGENCY REVIEW
- BID DOCUMENT
- ✓ FOR CONSTRUCTION
- AS-BUILT DOCUMENT

I HEREBY CERTIFY THAT THIS PLAN, SPECIFICATION OR REPORT WAS PREPARED BY ME OR UNDER MY DIRECT SUPERVISION AND THAT I AM A DULY LICENSED PROFESSIONAL ENGINEER UNDER THE LAWS OF THE STATE OF MINNESOTA.

TODD A. ERICKSON, PE
LICENSE NO. 40418
DATE: 04/28/2017

OWNER/DEVELOPER
CHASE DEVELOPMENT
2140 COUNTY ROAD 42 WEST
BURNSVILLE, MN 55337

PROJECT TITLE
EASTON VILLAGE
3RD ADDITION
FINAL PLAN
LAKE ELMO, MINNESOTA

NO.	REVISION DESCRIPTION	DATE
1	City Review	6-21-17

JOB NO. 16-176

SHEET TITLE
SANITARY SEWER & WATERMAIN PLAN & PROFILE

SHEET NO.
C15

PLAN VIEW - SANITARY SEWER (33RD STREET NORTH)

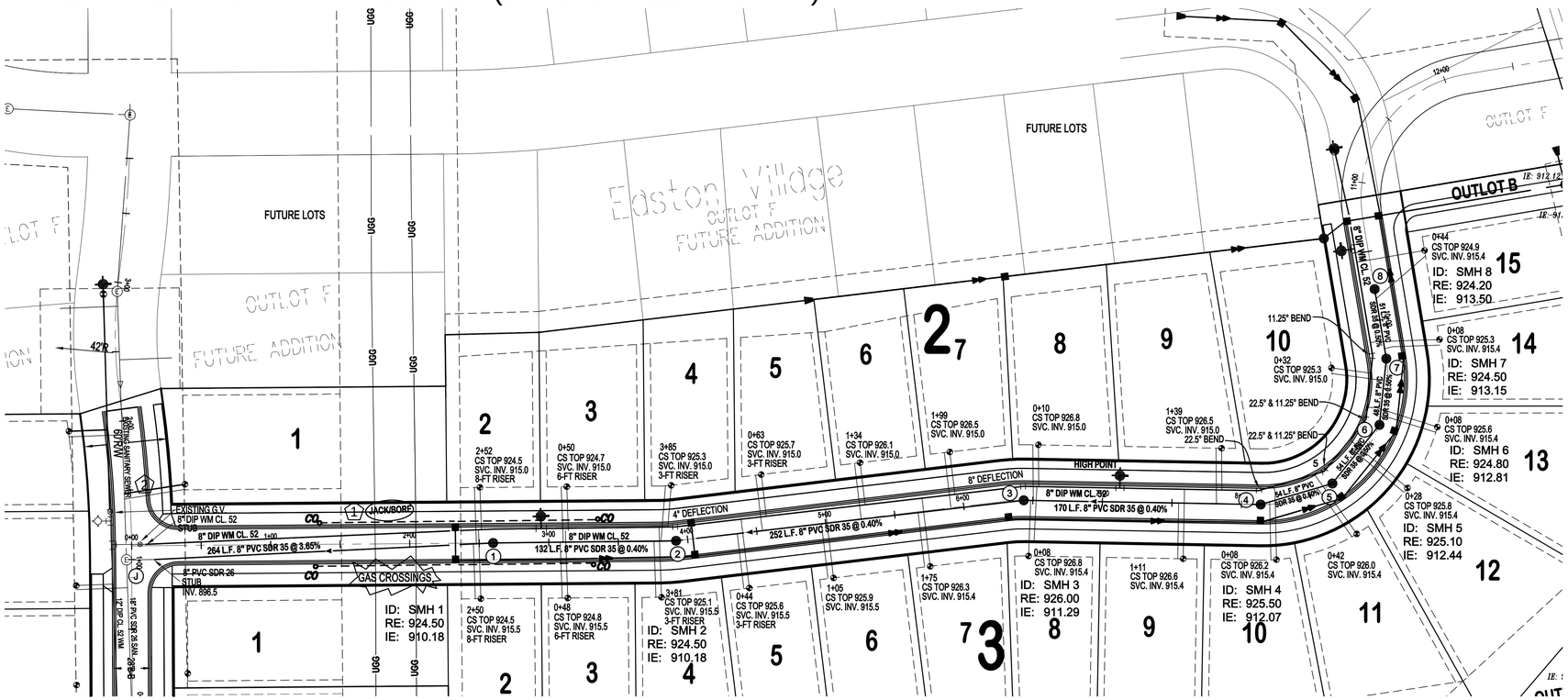

Keyed Notes

1. JACK / BORE AT GAS CROSSING. TELEVISING OF SANITARY REQUIRED PRIOR TO BACK FILL OF TRENCH.
2. CONNECT TO EXISTING SANITARY STUB. VERIFY ELEVATION PRIOR TO START OF JACK / BORE OPERATION.

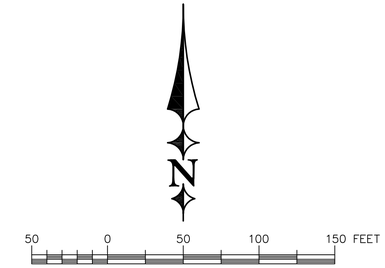

Legend

- 3RD ADDITION BOUNDARY
- PROPOSED 8" PVC (SDR 35 OR 26) SANITARY SEWER
- PROPOSED RCP STORM SEWER
- PROPOSED 8" DIP WM CL. 52 WATER MAIN, HYDRANT AND GATE VALVE
- PROPOSED SANITARY SEWER AND WATER SERVICE (SANITARY SERVICE - 4" PVC (SCH. 40) AND WATER SERVICE - 1" TYPE "K" COPPER WITH CURB STOP)
- PROPOSED RIGID PERFORATED 4" PVC DRAIN TILE WITH SOCK (REQUIRED 100-FT EACH SIDE OF LOW POINT CATCH BASINS OR AS SHOWN). PROVIDE CLEAN OUT AT END OF PIPE.
- EXISTING UNDERGROUND GAS LINE
- EXISTING STORM SEWER
- EXISTING WATERMAIN
- EXISTING SANITARY SEWER

Notes

1) SEE DETAIL SHEETS FOR SPECIFIC REQUIREMENTS FOR UTILITY INSTALLATION.
2) ALL UTILITIES SHALL BE INSTALLED PER CITY OF LAKE ELMO DETAILS AND SPECIFICATIONS.
3) TRACER WIRE IS REQUIRED ON ALL SANITARY SEWER MAIN LINE AND SERVICES.

PROFILE VIEW - SANITARY SEWER (33RD STREET NORTH)

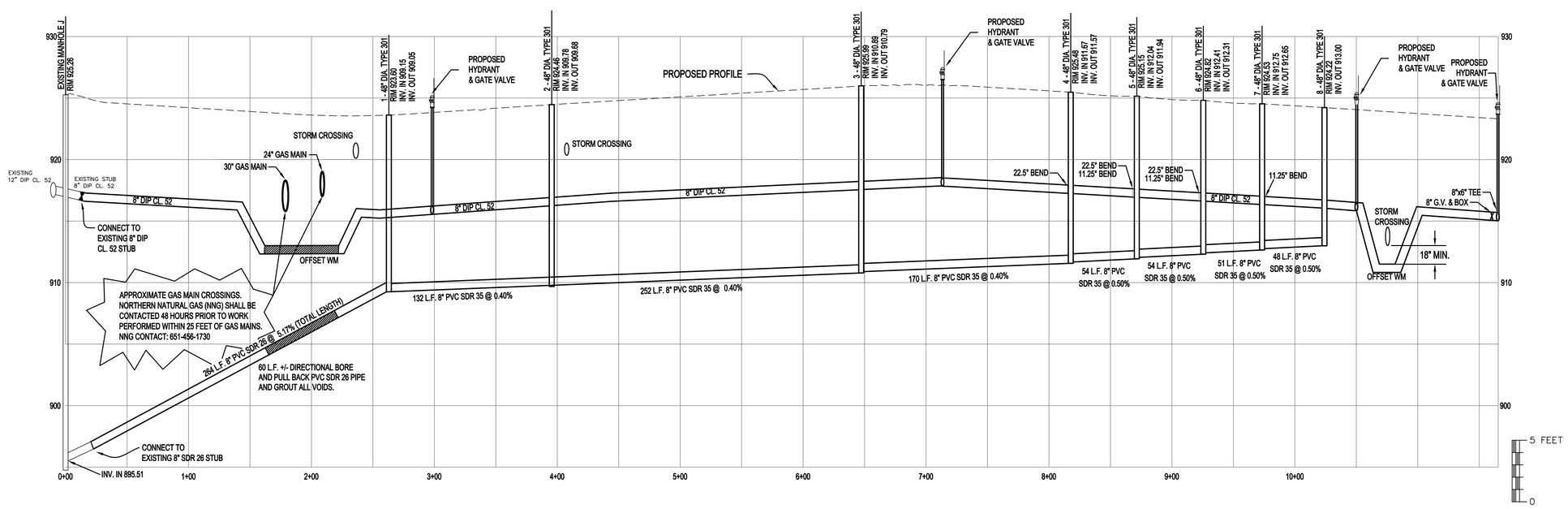

City Standard Plan Notes

WATERMAIN

1. ALL WATERMAIN AND ACCESSORIES MUST BE CONSTRUCTED IN ACCORDANCE WITH THE CITY OF LAKE ELMO STANDARD SPECIFICATIONS AND DETAILS.
2. MANIPULATION OF EXISTING VALVES SHALL BE PERFORMED ONLY BY CITY PERSONNEL.
3. WATERMAIN SHALL BE DUCTILE IRON PIPE, CLASS-52.
4. ALL FITTINGS SHALL COMPLY WITH CEAM SPEC. 2611.2.A.1. ALL FITTINGS SHALL BE DUCTILE IRON PIPE WITH POLYETHYLENE ENCASEMENT. ALL CONNECTIONS SHALL BE INSTALLED UTILIZING COR-BLUE NUTS & BOLTS.
5. USE GATE VALVES FOR ALL APPLICATIONS UP THROUGH 12 INCHES.
6. GATE VALVES SHALL BE RESILIENT WEDGE AMERICAN FLOW CONTROL SERIES 2500 OR APPROVED EQUAL. GATE VALVES MUST COMPLY WITH CEAM SPEC 2611.2, C.2.
7. USE BUTTERFLY VALVES FOR ALL APPLICATIONS GREATER THAN 12 INCHES.
8. BUTTERFLY VALVES SHALL BE MUELLER LINESEAL III, OR APPROVED EQUAL. BUTTERFLY VALVES SHALL COMPLY WITH CEAM SPEC. 2611.2, C.3.
9. BOLTS AND NUTS ON ALL VALVES AND HYDRANTS SHALL BE STAINLESS STEEL.
10. ALL HYDRANTS SHALL BE INSTALLED 5.0 FEET BACK OF CURB.
11. HYDRANTS SHALL BE WATEROUS "PACER," MODEL WB-67 OR APPROVED EQUAL, FITTED WITH FH 800 SERIES FLEX STAKE AND PAINTED RED.
12. HYDRANTS SHALL HAVE TWO OUTLET NOZZLES FOR 2-1/2 (I.D.) HOSE CONNECTIONS AND ONE 4" STORZ NOZZLE.
13. THE CURB STOP SERVICE ASSEMBLY SHALL HAVE A MINIMUM 1-FT ADJUSTMENT RANGE AND SHALL EXTEND 6 INCHES ABOVE FINISHED GRADE FULLY EXTENDED.
14. THE CONTRACTOR SHALL BE RESPONSIBLE FOR PROVIDING WATER TO HOMES AND BUSINESSES WHOSE WATER SUPPLY IS DISRUPTED DURING THE COURSE OF THE PROJECT.

SANITARY SEWER

1. ALL SANITARY SEWER AND ACCESSORIES MUST BE CONSTRUCTED IN ACCORDANCE WITH THE CITY OF LAKE ELMO STANDARD SPECIFICATIONS AND DETAILS.
2. ALL SANITARY SEWER PVC PIPE SHALL BE INSTALLED ACCORDING TO CITY STANDARD DRAWING 105 "GRANULAR MATERIAL BEDDING METHOD (FOR PVC SANITARY SEWER PIPE).
3. UNLESS NOTED OTHERWISE, ALL SMOOTH WALLED SANITARY SEWER PVC PIPE AND FITTINGS SHALL BE SDR 35 WITH ELASTOMERIC GASKETED JOINTS.
4. ALL SANITARY SEWER SERVICES SHALL BE 4-INCH PVC, SCH. 40 OR SDR 26 PIPE.
5. SMOOTH WALLED PVC PIPE AND FITTINGS SHALL CONFORM WITH THE REQUIREMENTS OF ASTM D-3054 FOR THE SIZE, STANDARD DIMENSION RATIO (SDR), AND STRENGTH REQUIREMENTS INDICATED ON THE PLANS, SPECIFICATIONS, AND SPECIAL PROVISIONS.
6. REINFORCED CONCRETE PIPE AND FITTINGS SHALL CONFORM WITH THE REQUIREMENTS OF MnDOT SPEC 3236 (REINFORCED CONCRETE PIPE) FOR THE TYPE, SIZE, AND STRENGTH CLASS SPECIFIED HEREIN.
7. JOINTS OF MANHOLE RISER SECTIONS SHALL BE TONGUE AND GROOVE WITH RUBBER "O" RING JOINTS PROVIDED ON ALL SANITARY SEWER MANHOLES.
8. SANITARY SEWER INLET AND OUTLET PIPES SHALL BE JOINED TO THE MANHOLE WITH A GASKETED, FLEXIBLE, WATERTIGHT CONNECTION TO ALLOW DIFFERENTIAL SETTLEMENT OF THE PIPE AND MANHOLE TO TAKE PLACE.
9. A 1'-0" TO 1'-4" MANHOLE SECTION SHALL BE INSTALLED UNDER THE CONE SECTION TO ALLOW FOR HEIGHT ADJUSTMENT WHENEVER POSSIBLE.
10. ALL SERVICE LINE STUBS MUST HAVE A 2"x2" HARDWOOD MARKER WITH METAL SPIKE RUNNING FROM THE END OF PIPE TO FINISHED GRADE ELEVATION.
11. UPON MAKING A CONNECTION TO AN EXISTING SANITARY SEWER STUB OR MANHOLE, DIRT AND DEBRIS SHALL BE PREVENTED FROM ENTERING THE EXISTING SEWER BY IMMEDIATELY INSTALLING WATERTIGHT PLUGS AS NEEDED IN THE EXISTING MANHOLE.

ERICKSON CIVIL
333 North Main Street, Suite 201
Stillwater, Minnesota 55082
Phone (612) 309-3804
www.ericksoncivilsite.com

DRAWING PHASE:

	OWNER REVIEW
	AGENCY REVIEW
	BID DOCUMENT
✓	FOR CONSTRUCTION
	AS-BUILT DOCUMENT

I HEREBY CERTIFY THAT THIS PLAN, SPECIFICATION OR REPORT WAS PREPARED BY ME OR UNDER MY DIRECT SUPERVISION AND THAT I AM A DULY LICENSED PROFESSIONAL ENGINEER UNDER THE LAWS OF THE STATE OF MINNESOTA.

TODD A. ERICKSON, PE
LICENSE NO. 40418
DATE: 04/28/2017

OWNER/DEVELOPER
CHASE DEVELOPMENT
2140 COUNTY ROAD 42 WEST
BURNSVILLE, MN 55337

PROJECT TITLE
EASTON VILLAGE
3RD ADDITION
FINAL PLAN
LAKE ELMO, MINNESOTA

NO.	REVISION DESCRIPTION	DATE
1	City Review	6-21-17

JOB NO. 16-176

SHEET TITLE
SANITARY SEWER & WATERMAIN PLAN & PROFILE

SHEET NO.
C16
SHEET 16 OF 25

PLAN VIEW - STORM SEWER

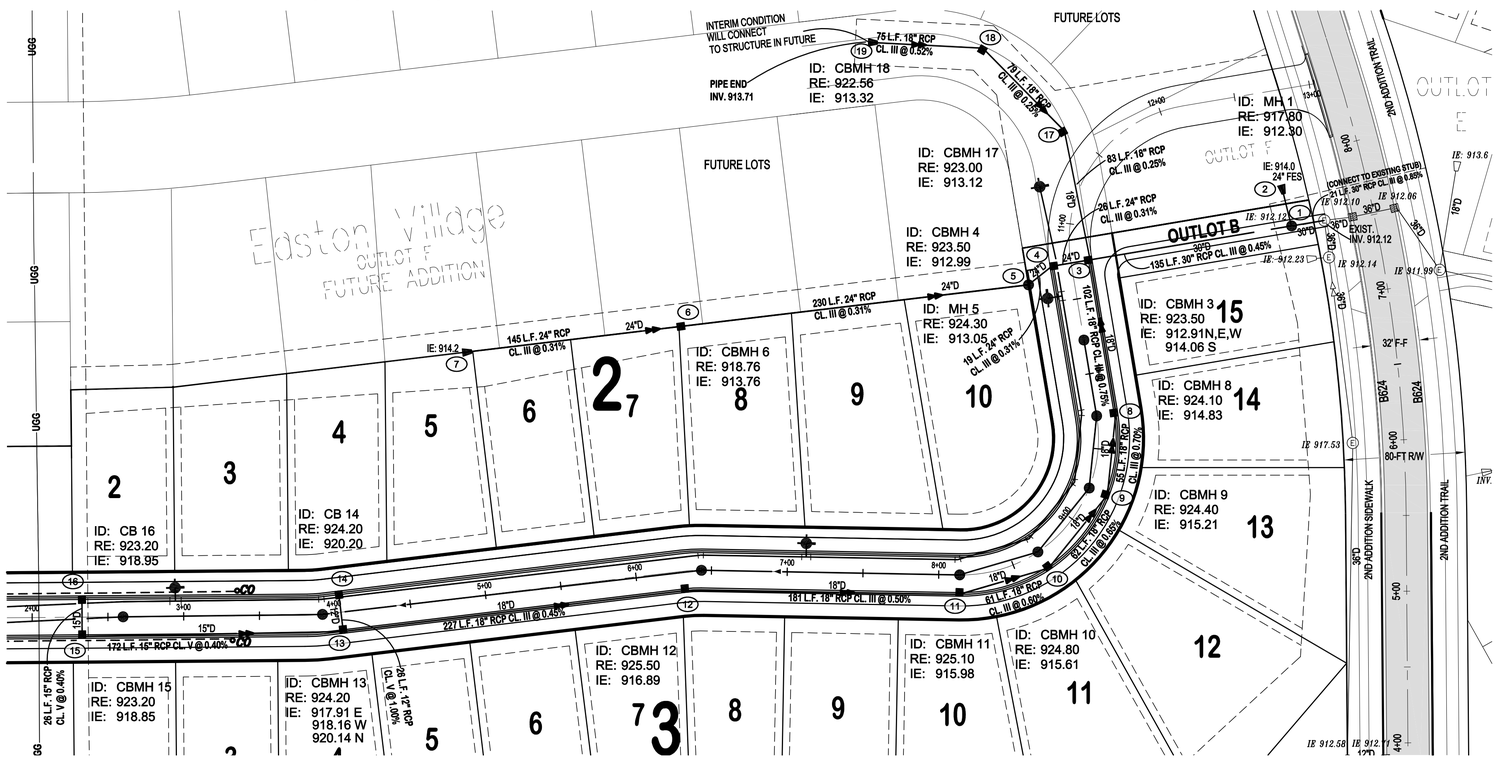

Structure Build Table

Structure ID	Rim Elev.	Inv. Elev.	Build Height	Pipe Size Inches	Pipe Cover Feet
1	917.80	912.30	5.50	30	3.00
3	923.50	912.91	10.59	30	8.09
4	923.73	912.99	10.74	24	8.74
5	924.24	913.05	11.19	24	9.19
6	918.76	913.76	5.00	24	3.00
8	924.10	914.83	9.27	18	7.77
9	924.40	915.21	9.19	18	7.69
10	924.80	915.61	9.19	18	7.69
11	925.10	915.98	9.12	18	7.62
12	925.50	916.88	8.62	18	7.12
13	924.20	917.91	6.29	18	4.79
14	924.20	920.20	4.00	12	3.00
15	923.20	918.85	4.35	15	3.10
16	923.20	918.95	4.25	15	3.00
17	923.00	913.12	9.88	18	8.38
18	922.56	913.32	9.24	18	7.74

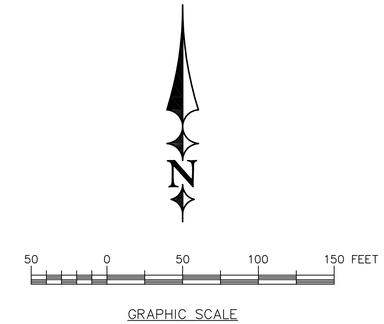

Legend

- PROPERTY BOUNDARY
- PROPOSED 8" PVC (SDR 35 OR 26) SANITARY SEWER
- PROPOSED RCP STORM SEWER
- PROPOSED 8" DIP WM CL. 52 WATER MAIN, HYDRANT AND GATE VALVE
- PROPOSED SANITARY SEWER AND WATER SERVICE (SANITARY SERVICE - 4" PVC (SCH. 40) AND WATER SERVICE - 1" TYPE "K" COPPER WITH CURB STOP)
- PROPOSED RIGID PERFORATED 4" PVC DRAIN TILE WITH SOCK (REQUIRED 100-FT EACH SIDE OF LOW POINT CATCH BASINS OR AS SHOWN). PROVIDE CLEAN OUT AT END OF PIPE.
- EXISTING UNDERGROUND GAS LINE
- EXISTING STORM SEWER
- EXISTING WATERMAIN
- EXISTING SANITARY SEWER

ERICKSON CIVIL
333 North Main Street, Suite 201
Stillwater, Minnesota 55082
Phone (612) 309-3804
www.ericksoncivilsite.com

DRAWING PHASE:
- OWNER REVIEW
- AGENCY REVIEW
- BID DOCUMENT
- ✓ FOR CONSTRUCTION
- AS-BUILT DOCUMENT

I HEREBY CERTIFY THAT THIS PLAN, SPECIFICATION OR REPORT WAS PREPARED BY ME OR UNDER MY DIRECT SUPERVISION AND THAT I AM A DULY LICENSED PROFESSIONAL ENGINEER UNDER THE LAWS OF THE STATE OF MINNESOTA.

TODD A. ERICKSON, PE
40418
LICENSE NO.
04/28/2017
DATE:

PROFILE VIEW - STORM RUN 3 - 16

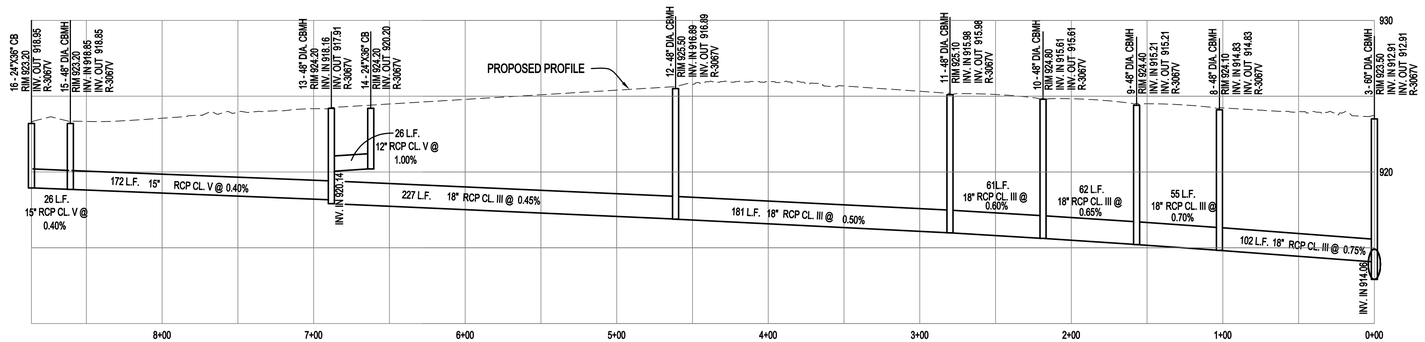

STORM RUN 3 - 19

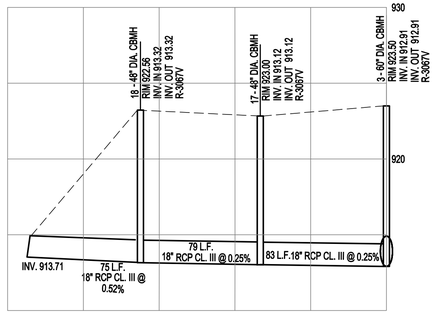

PROFILE VIEW - STORM RUN 1 - 7

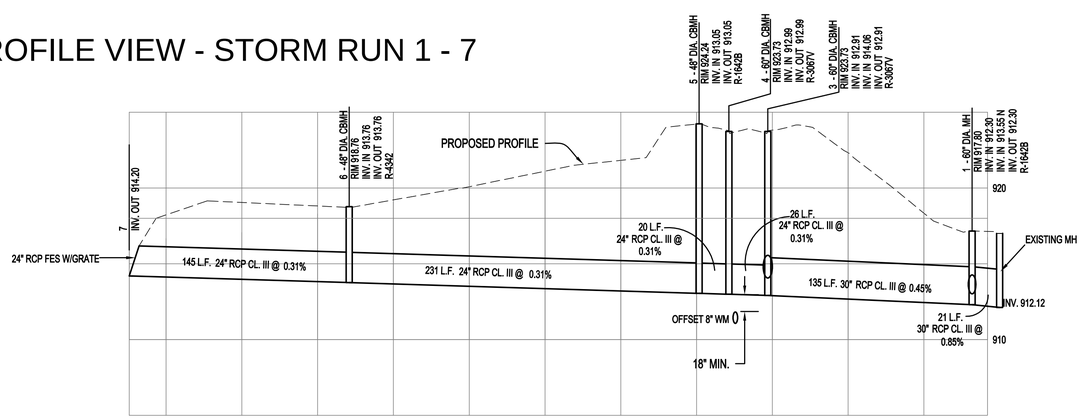

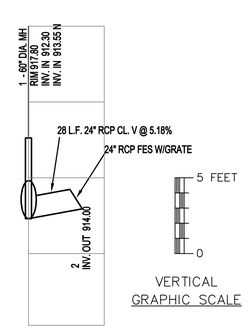

Notes

1) SEE DETAIL SHEETS FOR SPECIFIC REQUIREMENTS FOR UTILITY INSTALLATION.

2) ALL UTILTIES SHALL BE INSTALLED PER CITY OF LAKE ELMO DETAILS AND SPECIFICATIONS.

City Standard Plan Notes

1. ALL STORM SEWER AND ACCESSORIES MUST BE CONSTRUCTED IN ACCORDANCE WITH THE CITY OF LAKE ELMO STANDARD SPECIFICATIONS AND DETAILS.

2. REINFORCED CONCRETE PIPE AND FITTINGS SHALL CONFORM WITH THE REQUIREMENTS OF MnDOT SPEC 3236 (REINFORCED CONCRETE PIPE) FOR THE TYPE, SIZE, AND STRENGTH CLASS SPECIFIED HEREIN.

3. PRECAST CONCRETE MANHOLE AND CATCH BASIN SECTIONS SHALL CONFORM TO THE REQUIREMENTS OF ASTM C-477.

4. A 1'-0" TO 1'-4" MANHOLE SECTION SHALL BE INSTALLED UNDER THE CONE SECTION TO ALLOW FOR HEIGHT ADJUSTMENT WHENEVER POSSIBLE.

5. JOINTS OF MANHOLE RISER SECTIONS SHALL BE TONGUE AND GROOVE WITH RUBBER "O" RING JOINTS PROVIDED ON ALL STORM SEWER MANHOLES.

6. RIP-RAP SHALL BE HAND-PLACED OVER GEOTEXTILE FABRIC AND CONFORM TO MnDOT SPEC. 3601, CLASS III, OR AS SPECIFIED HEREIN.

7. THE GEOTEXTILE FABRIC USED UNDER RIP-RAP SHALL EXTEND 3 FT UNDER THE APRON.

8. FURNISH & INSTALL TRASH GUARDS ON ALL FLARED END SECTIONS.

9. ALL SILT SHALL BE CLEANED OUT FROM THE RIP-RAP AT THE END OF THE PROJECT.

STORM SEWER DESIGN TABLE

Up-Stream Struct.	Down-Stream Struct.	Len. Ft.	Plan Area Sq.ft.	Areas (ac.) Site Indv.	Areas (ac.) Site Sum.	C Indv.	C Avg.	Total Tc Min.	Tp Min.	Tc+Tp Min.	Tt Min.	Indv. I In/Hr	Avg. I In/Hr	CB Q CFS	Pipe Q CFS	Pipe Dia. In.	Pipe Grade %	Vel. Ft/S	Pipe Cap. CFS	Q Excess CFS
16	15	26	18,470	0.42	0.42	0.80	0.80	5.0	0.1	5.1	5.0	7.20	7.20	2.4	2.4	15	0.40	4.3	5.3	2.9
15	13	172	21,055	0.48	0.91	0.80	0.80	5.0	0.7	5.7	5.7	7.00	7.00	2.7	5.1	15	0.40	4.3	5.3	2.6
14	13	26	19,950	0.46	0.46	0.80	0.80	5.7	0.1	5.7	5.7	7.00	7.00	2.6	2.6	12	1.00	5.9	4.6	2.1
13	12	227	15,490	0.36	1.72	0.80	0.80	5.7	0.7	6.5	6.5	6.60	6.60	1.9	9.1	18	0.45	5.2	9.2	0.1
12	11	181	3,800	0.09	1.72	0.80	0.80	6.5	0.6	7.0	7.0	6.40	6.40	0.0	9.1	18	0.50	5.5	9.7	0.6
11	10	61	8,425	0.19	1.91	0.80	0.80	7.0	0.2	7.2	7.2	6.40	6.40	1.0	9.8	18	0.60	6.0	10.6	0.8
10	9	61	5,285	0.12	2.04	0.80	0.80	7.2	0.2	7.4	7.4	6.40	6.40	0.6	10.4	18	0.65	6.2	11.0	0.6
9	8	54	5,760	0.13	2.17	0.80	0.80	7.4	0.1	7.5	7.5	6.30	6.30	0.7	10.9	18	0.70	6.5	11.4	0.5
8	3	103	4,290	0.10	2.27	0.80	0.80	7.5	0.3	7.7	7.7	6.20	6.20	0.5	11.2	18	0.75	6.7	11.8	0.6

NOTE: Pipe run 1-7 based on hydrocad storm sewer analysis.

OWNER/DEVELOPER
CHASE DEVELOPMENT
2140 COUNTY ROAD 42 WEST
BURNSVILLE, MN 55337

PROJECT TITLE
EASTON VILLAGE
3RD ADDITION
FINAL PLAN
LAKE ELMO, MINNESOTA

NO.	REVISION DESCRIPTION	DATE
1	City Review	6-21-17

JOB NO. 16-176

SHEET TITLE
STORM SEWER PLAN & PROFILE

SHEET NO.
C17
SHEET 17 OF 25

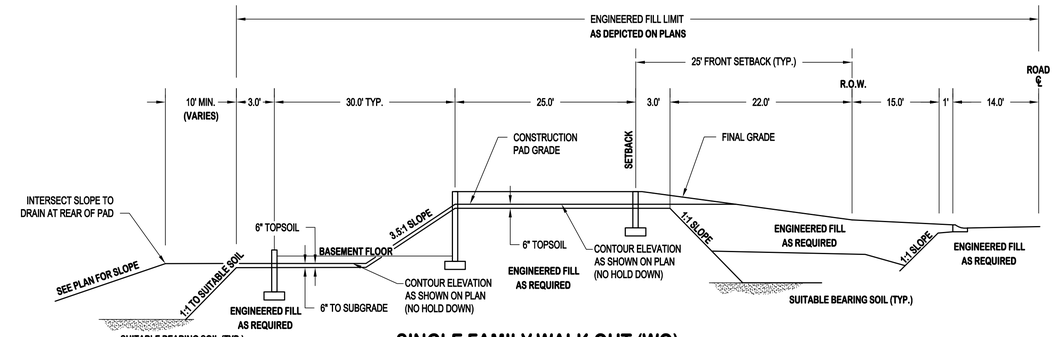

SINGLE FAMILY WALK OUT (WO)

NO SCALE

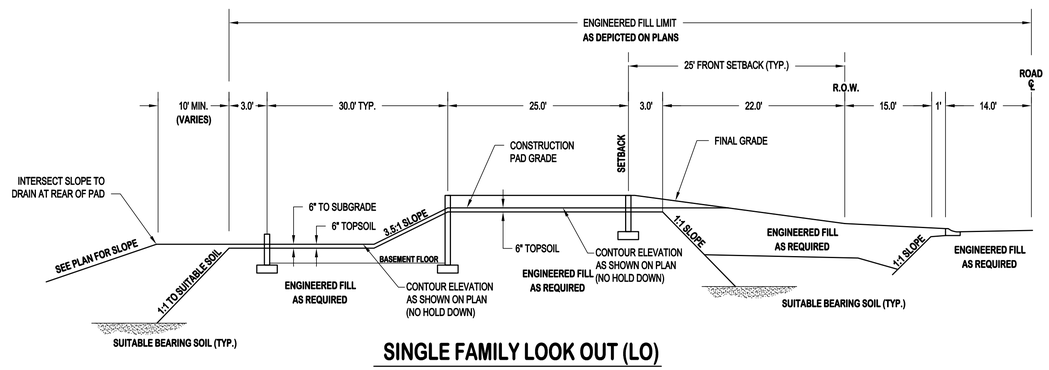

SINGLE FAMILY LOOK OUT (LO)

NO SCALE

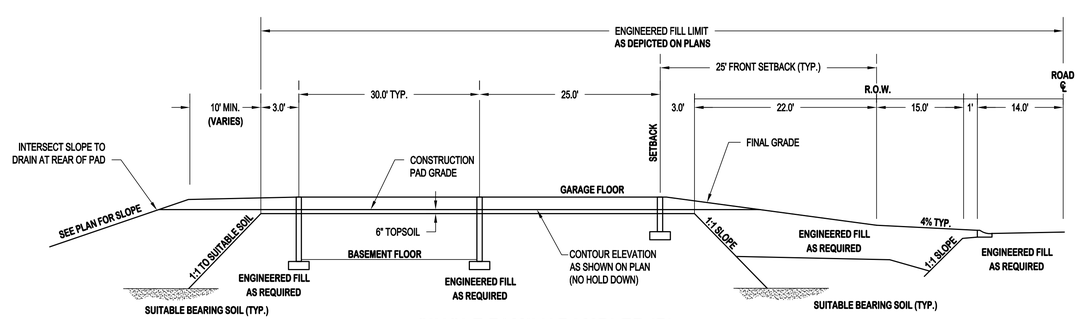

SINGLE FAMILY RAMBLER (R)

NO SCALE

ERICKSON CIVIL
333 North Main Street, Suite 201
Stillwater, Minnesota 55082
Phone (612) 309-3804
www.ericksoncivilsite.com

DRAWING PHASE:

	OWNER REVIEW
	AGENCY REVIEW
	BID DOCUMENT
✓	FOR CONSTRUCTION
	AS-BUILT DOCUMENT

I HEREBY CERTIFY THAT THIS PLAN, SPECIFICATION OR REPORT WAS PREPARED BY ME OR UNDER MY DIRECT SUPERVISION AND THAT I AM A DULY LICENSED PROFESSIONAL ENGINEER UNDER THE LAWS OF THE STATE OF MINNESOTA.

TODD A. ERICKSON, PE

LICENSE NO. 40418

DATE: 04/28/2017

OWNER/DEVELOPER
CHASE DEVELOPMENT
2140 COUNTY ROAD 42 WEST
BURNSVILLE, MN 55337

PROJECT TITLE
EASTON VILLAGE
3RD ADDITION
FINAL PLAN
LAKE ELMO, MINNESOTA

NO.	REVISION DESCRIPTION	DATE
1	City Review	6-21-17

JOB NO. 16-176

SHEET TITLE
DETAILS

SHEET NO.
C18

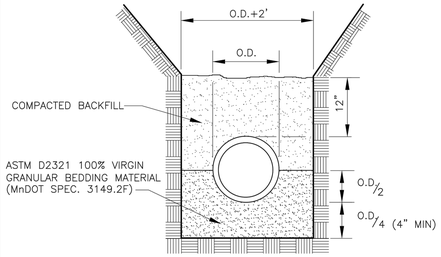

GRANULAR MATERIAL BEDDING
(TO BE USED WHERE, IN THE OPINION OF THE ENGINEER, UNSTABLE MATERIAL PREVENTS USE OF THE "EARTH FOUNDATION" DETAIL)

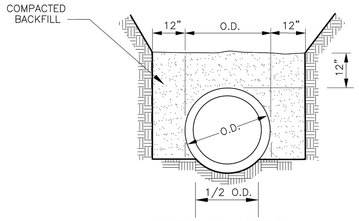

EARTH FOUNDATION
(EXCEPT SANITARY SEWER)

PIPE FOUNDATION DETAILS

MARCH 2017

THE CITY OF LAKE ELMO — CITY OF LAKE ELMO — STANDARD DRAWING NO. 101 — LAKE ELMO

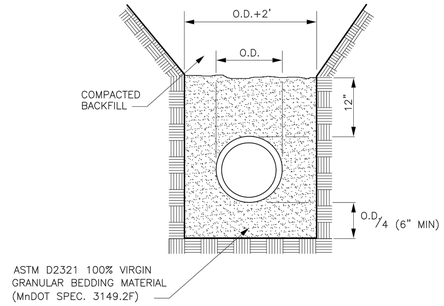

GRANULAR MATERIAL BEDDING METHOD

(FOR PVC SANITARY SEWER PIPE)

MARCH 2017

THE CITY OF LAKE ELMO — CITY OF LAKE ELMO — STANDARD DRAWING NO. 103 — LAKE ELMO

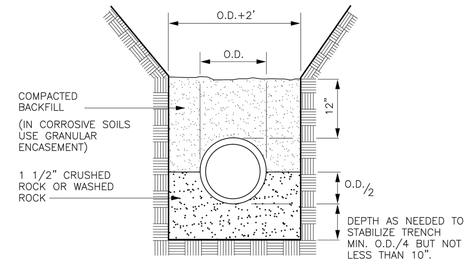

SPECIAL FOUNDATION FOR STABILIZING OF TRENCH

(AS DIRECTED BY ENGINEER)

MARCH 2017

THE CITY OF LAKE ELMO — CITY OF LAKE ELMO — STANDARD DRAWING NO. 105 — LAKE ELMO

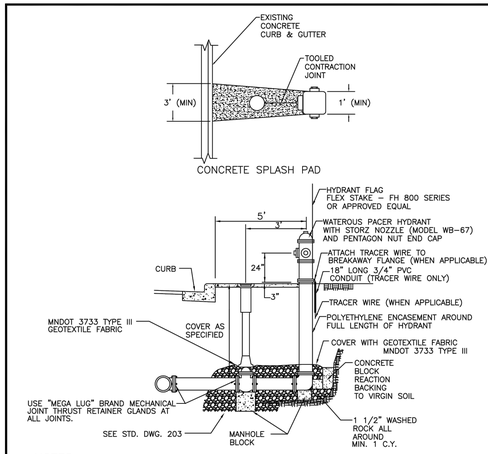

NOTES:
1. USE MEGA LUGS ON ALL JOINTS. PROVIDE CONCRETE BLOCKING BEHIND HYDRANT AND TEE. USE COR-BLUE T BOLTS ON ALL FITTINGS.
2. PLUG WEEP HOLES IF GROUNDWATER IS PRESENT.
3. IF WEEP HOLES ARE PLUGGED, PUMPER NOZZLE CAP MUST BE PAINTED GREEN AND A TAG SHALL BE ATTACHED TO THE HYDRANT STATING "DRAIN HOLES PLUGGED".
4. SUPPLY 1 EXTRA FLEX STAKE FOR EVERY 10 HYDRANTS INSTALLED. MINIMUM ONE PER PROJECT.
5. SUPPLY 1 HYDRANT STORZ WRENCH OR HYDRANT REPAIR KIT PER PROJECT.
6. SUPPLY 1 6" HYDRANT EXTENSION AS DIRECTED BY THE ENGINEER.
7. ALL HYDRANTS NOT IN SERVICE SHALL BE COVERED WITH BLACK POLY PLASTIC.
8. CONCRETE SPLASH PAD SURFACE SHALL HAVE BROOMED FINISH.
**EXTRA STAKES AND REPAIR KITS ARE TO BE DELIVERED TO THE PUBLIC WORKS BUILDING.

TYPICAL HYDRANT LAYOUT

(VALVE IN BOULEVARD)

MARCH 2017

THE CITY OF LAKE ELMO — CITY OF LAKE ELMO — STANDARD DRAWING NO. 201 — LAKE ELMO

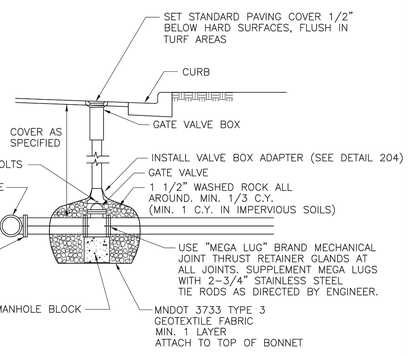

NOTES:
1. SUPPLY ONE GATE VALVE KEY PER PROJECT, AS DIRECTED BY THE ENGINEER. EXTRA KEYS SHALL BE DELIVERED TO THE PUBLIC WORKS BUILDING.
2. MAXIMUM DEPTH OF OPERATING NUT ON VALVE TO BE 10 FT.

GATE VALVE INSTALLATION

MARCH 2017

THE CITY OF LAKE ELMO — CITY OF LAKE ELMO — STANDARD DRAWING NO. 203 — LAKE ELMO

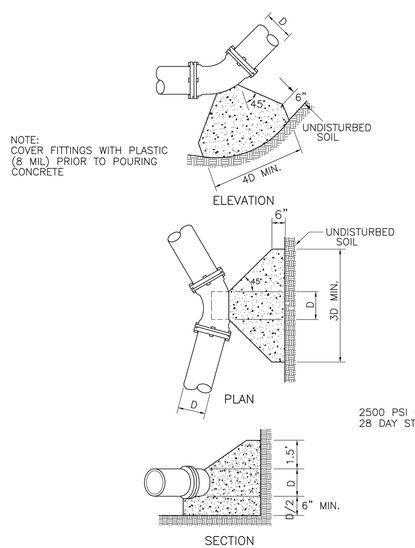

CONCRETE REACTION BACKING

(FOR BENDS)

MARCH 2017

THE CITY OF LAKE ELMO — CITY OF LAKE ELMO — STANDARD DRAWING NO. 206 — LAKE ELMO

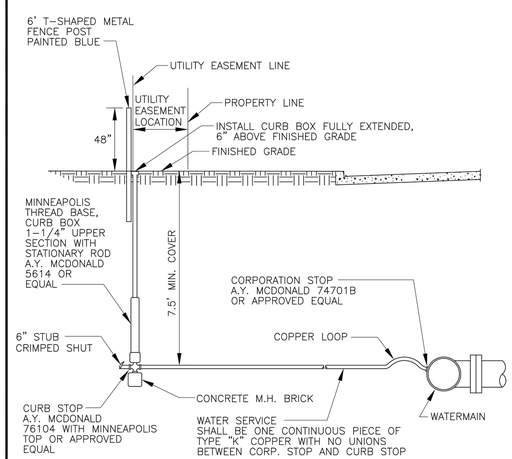

TYPICAL WATER SERVICE 1" TO 2 1/2" COPPER

NOTES:
1. SERVICE TAP TO BE MADE SLIGHTLY ABOVE SPRING LINE SO THAT COPPER COPPER LOOP SHALL NOT EXTEND ABOVE MAIN. MAINTAIN 7.5' MINIMUM COVER EXTEND ABOVE MAIN. MAINTAIN 7.5' MINIMUM SERVICE LINES.
2. IF TAPPING SADDLE IS REQUIRED, IT SHALL BE STAINLESS STEEL DOUBLE-STUD WRAP AROUND TAPPING SADDLE SMITH-BLAIR 372 OR APPROVED EQUAL.

WATER SERVICE ON DIP MAIN

MARCH 2017

THE CITY OF LAKE ELMO — CITY OF LAKE ELMO — STANDARD DRAWING NO. 207A — LAKE ELMO

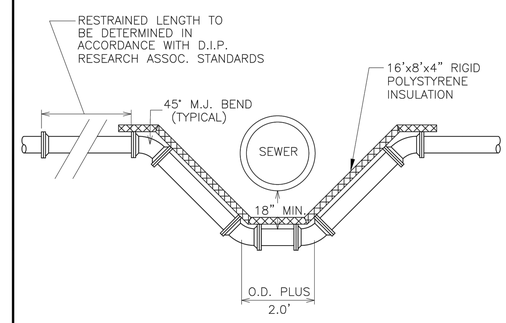

NOTE: FITTINGS SHALL BE RESTRAINED WITH THE USE OF APPROVED MECHANICAL JOINT RESTRAINING GLANDS.

WATERMAIN OFFSET

MARCH 2017

THE CITY OF LAKE ELMO — CITY OF LAKE ELMO — STANDARD DRAWING NO. 210 — LAKE ELMO

ERICKSON CIVIL
333 North Main Street, Suite 201
Stillwater, Minnesota 55082
Phone (612) 309-3804
www.ericksoncivilsite.com

DRAWING PHASE:
- OWNER REVIEW
- ✓ AGENCY REVIEW
- BID DOCUMENT
- FOR CONSTRUCTION
- AS-BUILT DOCUMENT

I HEREBY CERTIFY THAT THIS PLAN, SPECIFICATION OR REPORT WAS PREPARED BY ME OR UNDER MY DIRECT SUPERVISION AND THAT I AM A DULY LICENSED PROFESSIONAL ENGINEER UNDER THE LAWS OF THE STATE OF MINNESOTA.

TODD A. ERICKSON, PE
LICENSE NO. 40418
DATE: 04/28/2017

OWNER/DEVELOPER
CHASE DEVELOPMENT
2140 COUNTY ROAD 42 WEST
BURNSVILLE, MN 55337

PROJECT TITLE
EASTON VILLAGE
3RD ADDITION
FINAL PLAN
LAKE ELMO, MINNESOTA

NO.	REVISION DESCRIPTION	DATE

JOB NO. 16-176

SHEET TITLE
CITY STANDARD DETAIL PLATES

SHEET NO.
C19

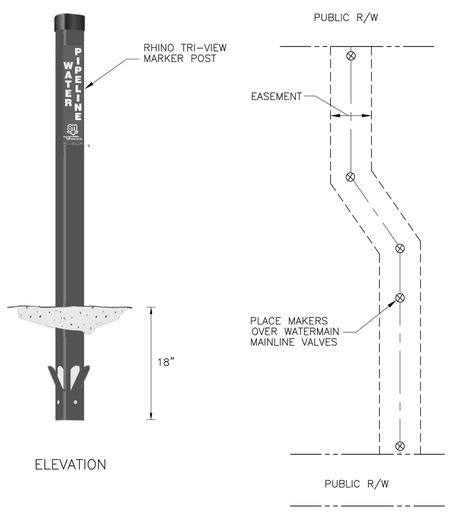

WATERMAIN OFFROAD STRUCTURE MARKER

(AS DIRECTED BY ENGINEER)

MARCH 2017

CITY OF LAKE ELMO — STANDARD DRAWING NO. 211 — LAKE ELMO

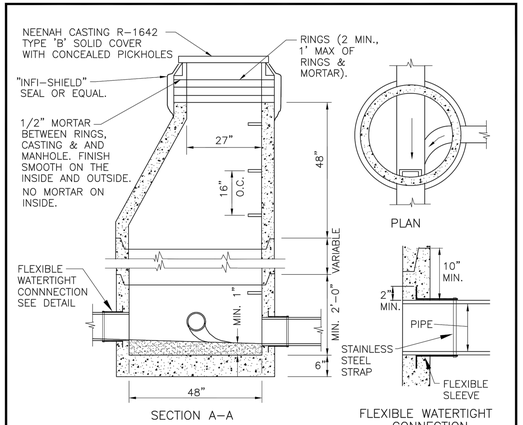

NO WOOD SHALL BE USED FOR ADJUSTING CASTING; CEMENT MORTAR ONLY.

CAST IRON MANHOLE FRAME & COVER AS PER SPECIFICATIONS.

MANHOLE STEPS SHALL BE CAST IRON, ALUMINUM OR STEEL REINFORCED PLASTIC, PER ASTM C478. STEP LOCATION SHALL BE AS NOTED IN THE SPECIFICATIONS.

PRECAST REINFORCED CONCRETE MANHOLE SECTIONS PER ASTM C478, FURNISHED WITH O-RING GASKETS AND LUBRICANT EXCEPT AS OTHERWISE SPECIFIED. A 12" OR 16" BARREL SECTION SHALL BE INSTALLED UNDER THE CONE WHENEVER POSSIBLE.

PIPE CONNECTIONS TO MANHOLE SHALL BE MADE WATER TIGHT BY CAST INPLACE RUBBER BOOT AND CEMENT MORTAR. INSIDE SURFACE SHALL BE FINISHED SMOOTH.

SANITARY SEWER MANHOLE, TYPE 301

(PIPES 27" OR LESS)

MARCH 2017

CITY OF LAKE ELMO — STANDARD DRAWING NO. 301 — LAKE ELMO

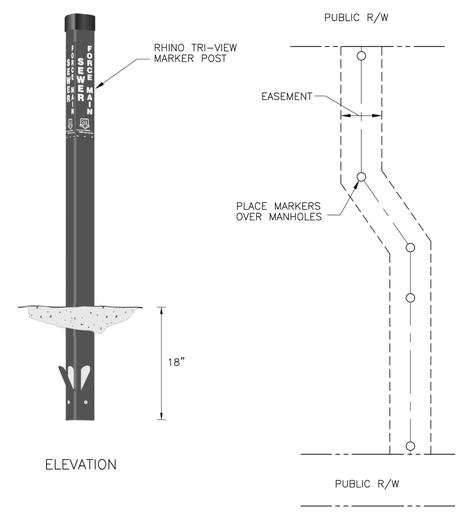

SANITARY SEWER OFFROAD STRUCTURE MARKER

(AS DIRECTED BY ENGINEER)

MARCH 2017

CITY OF LAKE ELMO — STANDARD DRAWING NO. 311 — LAKE ELMO

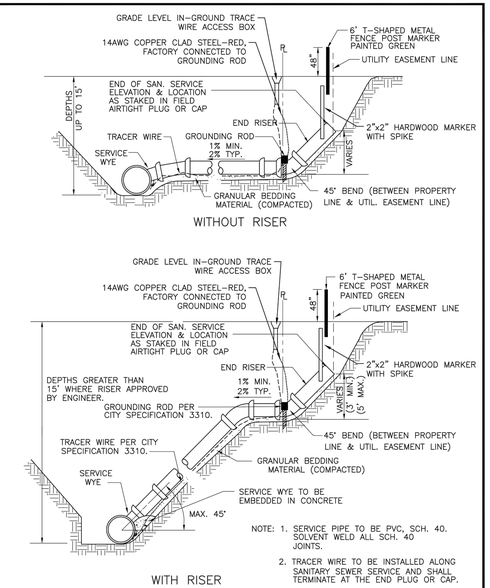

NOTE: 1. SERVICE PIPE TO BE PVC, SCH. 40. SOLVENT WELD ALL SCH. 40 JOINTS.

2. TRACER WIRE TO BE INSTALLED ALONG SANITARY SEWER SERVICE AND SHALL TERMINATE AT THE END PLUG OR CAP.

SANITARY SEWER SERVICE

MARCH 2017

CITY OF LAKE ELMO — STANDARD DRAWING NO. 313 — LAKE ELMO

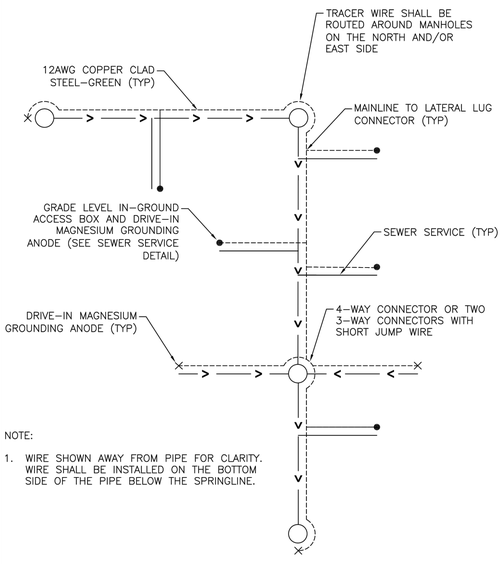

NOTE:

1. WIRE SHOWN AWAY FROM PIPE FOR CLARITY. WIRE SHALL BE INSTALLED ON THE BOTTOM SIDE OF THE PIPE BELOW THE SPRINGLINE.

TRACER WIRE PLAN VIEW (SANITARY SEWER)

MARCH 2017

CITY OF LAKE ELMO — STANDARD DRAWING NO. 315 — LAKE ELMO

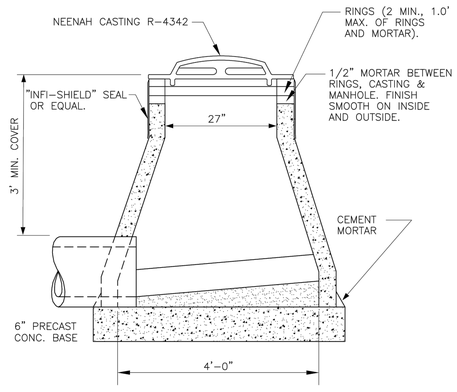

NO WOOD SHALL BE USED FOR ADJUSTING CASTING; CEMENT MORTAR ONLY.

CAST IRON CATCH BASIN FRAME & COVER CASTINGS PER SPECIFICATIONS.

PRECAST REINFORCED CONCRETE CONE SECTION & PRECAST BASE PER ASTM C478.

FILL OPENING BETWEEN PIPE AND MANHOLE WALL WITH CEMENT MORTAR INSIDE SURFACE SHALL BE FINISHED SMOOTH.

CATCH BASIN, TYPE 402

MARCH 2017

CITY OF LAKE ELMO — STANDARD DRAWING NO. 402 — LAKE ELMO

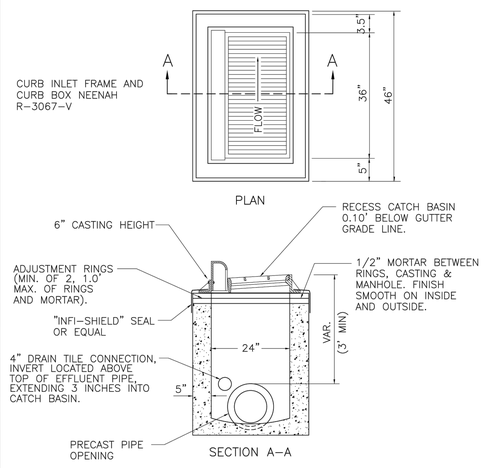

PRECAST REINFORCED CONCRETE CATCH BASIN & BASE SLAB PER ASTM C478

CATCH BASIN, TYPE 404

MARCH 2017

CITY OF LAKE ELMO — STANDARD DRAWING NO. 404 — LAKE ELMO

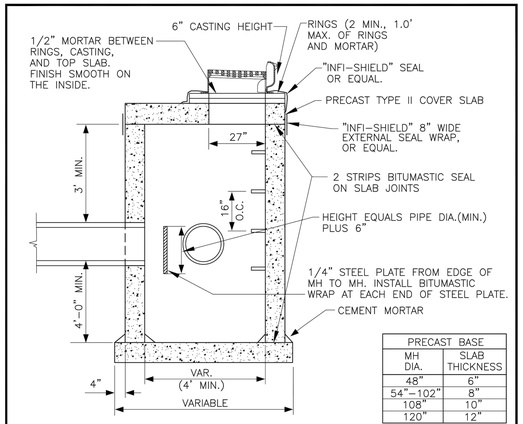

PRECAST BASE	
MH DIA.	SLAB THICKNESS
48"	6"
54"-102"	8"
108"	10"
120"	12"

NOTES: NO WOOD SHALL BE USED FOR ADJUSTING CASTING; CEMENT MORTAR ONLY.

CAST IRON FRAME & GRATE CASTINGS PER SPECIFICATIONS.

MANHOLE STEPS SHALL BE CAST IRON, ALUMINUM, OR STEEL REINFORCED PLASTIC PER ASTM C478. LOCATION SHALL BE AS NOTED IN THE SPECIFICATIONS.

PRECAST REINFORCED CONCRETE BASE SLAB & COVER SLAB PER ASTM C478.

PRECAST REINFORCED CONCRETE MANHOLE SECTIONS PER ASTM C478, FURNISHED WITH O-RING GASKETS & LUBRICANT, OR 8" CONCRETE MANHOLE BLOCK MANHOLE SECTION WITH 1/2" MORTARED EXTERIOR

FILL OPENING BETWEEN PIPE AND MANHOLE WALL WITH CEMENT MORTAR. INSIDE SURFACE SHALL BE FINISHED SMOOTH.

CATCH BASIN/MANHOLE WITH SUMP, TYPE 405

MARCH 2017

CITY OF LAKE ELMO — STANDARD DRAWING NO. 405 — LAKE ELMO

ERICKSON CIVIL

333 North Main Street, Suite 201
Stillwater, Minnesota 55082
Phone (612) 309-3804

www.ericksoncivilsite.com

DRAWING PHASE:

- OWNER REVIEW
- ✓ AGENCY REVIEW
- BID DOCUMENT
- FOR CONSTRUCTION
- AS-BUILT DOCUMENT

I HEREBY CERTIFY THAT THIS PLAN, SPECIFICATION OR REPORT WAS PREPARED BY ME OR UNDER MY DIRECT SUPERVISION AND THAT I AM A DULY LICENSED PROFESSIONAL ENGINEER UNDER THE LAWS OF THE STATE OF MINNESOTA.

TODD A. ERICKSON, PE

LICENSE NO. 40418

DATE: 04/28/2017

OWNER/DEVELOPER

CHASE DEVELOPMENT
2140 COUNTY ROAD 42 WEST
BURNSVILLE, MN 55337

PROJECT TITLE

EASTON VILLAGE
3RD ADDITION
FINAL PLAN
LAKE ELMO, MINNESOTA

NO.	REVISION DESCRIPTION	DATE

JOB NO. 16-176

SHEET TITLE

CITY STANDARD DETAIL PLATES

SHEET NO.

C20

SHEET 20 OF 25

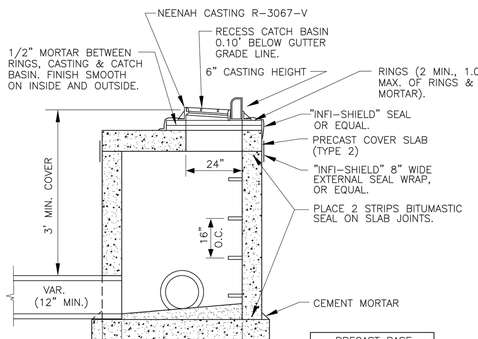

PRECAST BASE	
MH DIA.	SLAB THICKNESS
48"	6"
54"–102"	8"
108"	10"
120"	12"

NO WOOD SHALL BE USED FOR ADJUSTING CASTING; CEMENT MORTAR ONLY.

CAST IRON FRAME & GRATE CASTINGS PER SPECIFICATIONS.

MANHOLE STEPS SHALL BE CAST IRON, ALUMINUM OR STEEL REINFORCED PLASTIC PER ASTM C478. LOCATION SHALL BE AS NOTED IN THE SPECIFICATIONS.

PRECAST REINFORCED CONCRETE BASE SLAB & COVER SLAB PER ASTM C478,

PRECAST REINFORCED CONCRETE MANHOLE SECTIONS PER ASTM C478, OR 8" CONCRETE MANHOLE BLOCK WITH 1/2" MORTARED EXTERIOR.

FURNISH PRECAST CONCRETE MANHOLE SECTIONS WITH O-RING GASKETS & LUBRICANT EXCEPT AS OTHERWISE SPECIFIED.

FILL OPENING BETWEEN PIPE AND MANHOLE WALL WITH CEMENT MORTAR. INSIDE SURFACE SHALL BE FINISHED SMOOTH.

CATCH BASIN/MANHOLE, TYPE 406

MARCH 2017

THE CITY OF LAKE ELMO — CITY OF LAKE ELMO — STANDARD DRAWING NO. 406 — LAKE ELMO

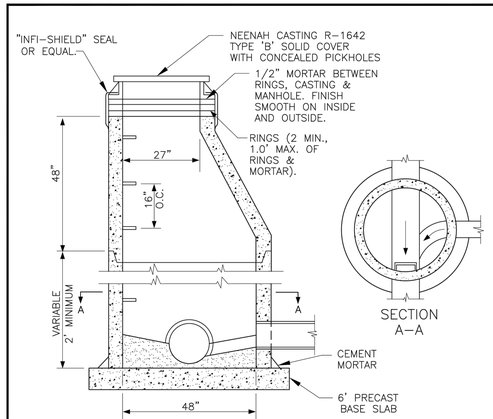

ELEVATION

NO WOOD SHALL BE USED FOR ADJUSTING CASTING; CEMENT MORTAR ONLY.

CAST IRON MANHOLE FRAME & COVER AS PER SPECIFICATIONS.

MANHOLE STEPS SHALL BE CAST IRON, ALUMINUM OR STEEL REINFORCED PLASTIC PER ASTM C478. LOCATION SHALL BE AS NOTED IN THE SPECIFICATIONS.

PRECAST REINFORCED CONCRETE MANHOLE SECTIONS & BASE SLAB PER ASTM C478.

FURNISH PRECAST MANHOLE SECTIONS WITH O-RING GASKETS & LUBRICANT EXCEPT AS OTHERWISE SPECIFIED.
A 12" OR 16" BARREL SECTION SHALL BE INSTALLED UNDER THE CONE WHENEVER POSSIBLE.

FILL OPENING BETWEEN PIPE & MH WALL WITH CEMENT MORTAR. INSIDE SURFACE SHALL BE FINISHED SMOOTH.

STORM SEWER MANHOLE, TYPE 407
(PIPES 27" OR LESS)

MARCH 2017

THE CITY OF LAKE ELMO — CITY OF LAKE ELMO — STANDARD DRAWING NO. 407 — LAKE ELMO

TABLE OF QUANTITIES
RIPRAP AT RCP OUTLETS

DIA. OF ROUND PIPE (IN.)	L (FT.)	CLASS II d_{50} = 6" GEO-TEXTILE FILTER (SQ.YD.)	CLASS II GRANULAR FILTER UNDER APRON (CU.YD.)	CLASS II 12" DEPTH RIPRAP (CU.YD.)	CLASS III d_{50} = 9" GEO-TEXTILE FILTER (SQ.YD.)	CLASS III GRANULAR FILTER UNDER APRON (CU.YD.)	CLASS III 18" DEPTH RIPRAP (CU.YD.)	CLASS IV d_{50} = 12" GEO-TEXTILE FILTER (SQ.YD.)	CLASS IV GRANULAR FILTER UNDER APRON (CU.YD.)	CLASS IV 24" DEPTH RIPRAP (CU.YD.)
12	8	16.9	0.2	3.0	19.6	0.3	4.4	22.6	0.3	5.9
15	8	18.0	0.2	3.2	20.8	0.3	4.8	23.9	0.4	6.4
18	10	22.4	0.3	4.3	25.6	0.4	6.4	29.0	0.5	8.5
21	10	24.1	0.4	4.7	27.4	0.6	7.1	30.9	0.7	9.4
24	12	29.7	0.5	6.2	33.4	0.8	9.2	37.3	1.0	12.3
27	12	31.4	0.6	6.6	35.2	0.9	9.9	39.2	1.2	13.2
30	14	37.4	0.8	8.2	41.6	1.1	12.3	46.0	1.5	16.4
36	16	45.9	1.1	10.6	50.5	1.6	15.8	55.4	2.1	21.1
42	18	52.8	1.2	12.5	57.8	1.7	18.7	63.0	2.3	24.9
48	20	61.1	1.5	14.8	66.5	2.2	22.2	72.0	2.9	29.6

TABLE OF QUANTITIES
RIPRAP AT RCP-A OUTLETS

SPAN OF PIPE ARCH (IN.)	L (FT.)	CLASS II d_{50} = 6" GEO-TEXTILE FILTER (SQ.YD.)	CLASS II GRANUL. FILTER UNDER APRON (CU.YD.)	CLASS II 12" DEPTH RIPRAP (CU.YD.)	CLASS III d_{50} = 9" GEO-TEXTILE FILTER (SQ.YD.)	CLASS III GRANUL. FILTER UNDER APRON (CU.YD.)	CLASS III 18" DEPTH RIPRAP (CU.YD.)	CLASS IV d_{50} = 12" GEO-TEXTILE FILTER (SQ.YD.)	CLASS IV GRANUL. FILTER UNDER APRON (CU.YD.)	CLASS IV 24" DEPTH RIPRAP (CU.YD.)
22	10	22.4	0.3	4.1	25.6	0.4	6.1	29.0	0.5	8.1
28	12	29.5	0.5	5.7	33.2	0.7	8.5	37.1	0.9	11.3
36	14	37.3	0.8	7.5	41.5	1.1	11.2	45.8	1.5	14.9
43	16	45.9	1.1	9.5	50.5	1.6	14.3	55.3	2.1	19.0
51	18	52.5	1.2	11.3	57.5	1.7	16.9	62.7	2.3	22.5
58	20	59.9	1.3	13.2	65.2	1.9	19.8	70.7	2.5	26.4

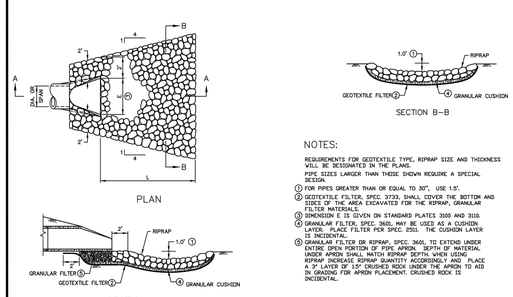

NOTES:

REQUIREMENTS FOR GEOTEXTILE TYPE, RIPRAP SIZE AND THICKNESS WILL BE DESIGNATED IN THE PLANS.

PIPE SIZES LARGER THAN THOSE SHOWN REQUIRE A SPECIAL DESIGN.

① FOR PIPES GREATER THAN OR EQUAL TO 30", USE 1.5'.

② GEOTEXTILE FILTER, SPEC. 3733. SHALL COVER THE BOTTOM AND SIDES OF THE AREA EXCAVATED FOR THE RIPRAP, GRANULAR FILTER MATERIALS.

③ DIMENSION E IS GIVEN ON STANDARD PLATES 3100 AND 3110.

④ GRANULAR FILTER, SPEC. 3601, MAY BE USED AS A CUSHION LAYER. GRANULAR FILTER PER SPEC. 2551. THE CUSHION LAYER IS INCIDENTAL.

⑤ GRANULAR FILTER OR RIPRAP, SPEC. 3601, TO EXTEND UNDER ENTIRE OPEN PORTION OF PIPE APRON. DEPTH OF MATERIAL UNDER APRON SHALL MATCH RIPRAP DEPTH WHEN USING RIPRAP INCREASE RIPRAP QUANTITY ACCORDINGLY AND PLACE A 9" LAYER OF 15" CRUSHED ROCK UNDER THE APRON TO AID IN GRADING FOR APRON PLACEMENT. CRUSHED ROCK IS INCIDENTAL.

RIPRAP AT RCP OUTLETS

MARCH 2017

THE CITY OF LAKE ELMO — CITY OF LAKE ELMO — STANDARD DRAWING NO. 411 — LAKE ELMO

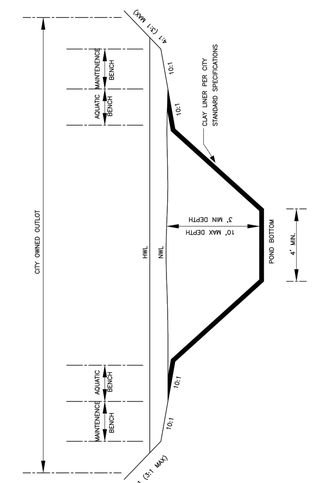

TYPICAL POND SECTION

MARCH 2017

THE CITY OF LAKE ELMO — CITY OF LAKE ELMO — STANDARD DRAWING NO. 416 — LAKE ELMO

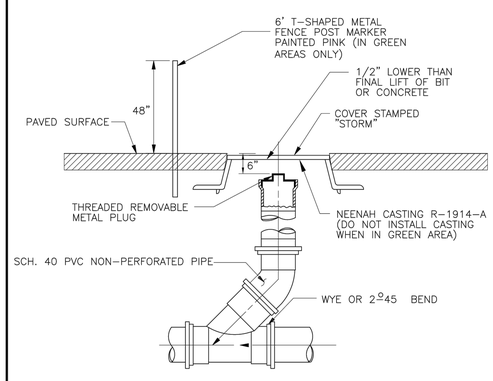

NOTE:
INSTALL CLEANOUTS AT A PROPERTY LINE WHENEVER POSSIBLE.

DRAINTILE CLEANOUT
(CASTING USED FOR CURB STOPS IN HARD SURFACES)

MARCH 2017

THE CITY OF LAKE ELMO — CITY OF LAKE ELMO — STANDARD DRAWING NO. 419 — LAKE ELMO

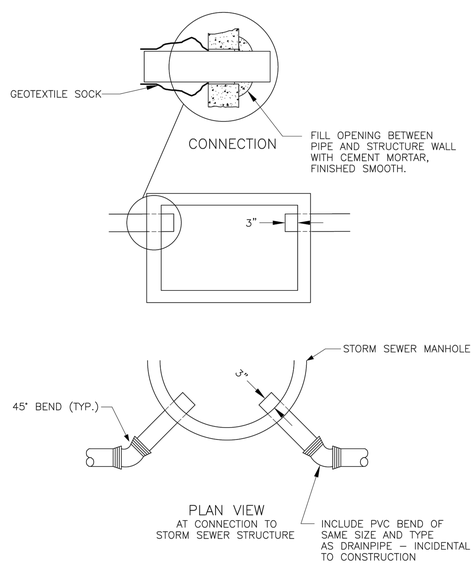

DRAIN TILE CONNECTIONS

MARCH 2017

THE CITY OF LAKE ELMO — CITY OF LAKE ELMO — STANDARD DRAWING NO. 420 — LAKE ELMO

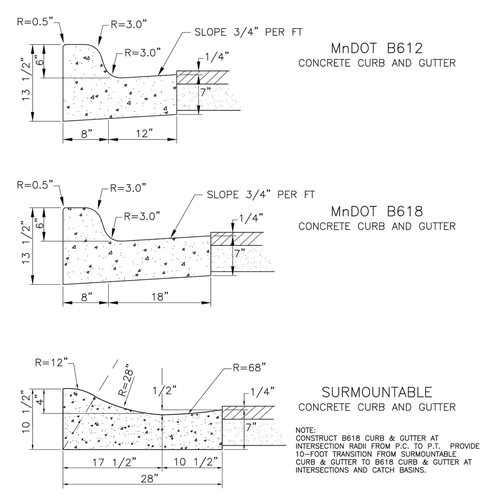

NOTE:
CONSTRUCT B618 CURB & GUTTER AT INTERSECTION RADII FROM P.C. TO P.T. PROVIDE 10-FOOT TRANSITION FROM SURMOUNTABLE CURB & GUTTER TO B618 CURB & GUTTER AT INTERSECTIONS AND CATCH BASINS.

CONCRETE CURB & GUTTER

MARCH 2017

THE CITY OF LAKE ELMO — CITY OF LAKE ELMO — STANDARD DRAWING NO. 501 — LAKE ELMO

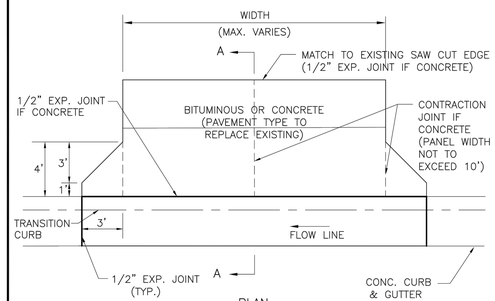

DRIVEWAY TYPE	SURFACE THICKNESS	BASE THICKNESS
BITUMINOUS	3 INCHES	6 INCHES
CONCRETE	6 INCHES	4 INCHES

NOTES :
1. BITUMINOUS MATERIAL SHALL BE PER STREET TYPICAL SECTION.
2. AGGREGATE BASE MATERIAL SHALL BE PER STREET TYPICAL SECTION.

RESIDENTIAL DRIVEWAY

MARCH 2017

THE CITY OF LAKE ELMO — CITY OF LAKE ELMO — STANDARD DRAWING NO. 504 — LAKE ELMO

ERICKSON CIVIL
333 North Main Street, Suite 201
Stillwater, Minnesota 55082
Phone (612) 309-3804
www.ericksoncivilsite.com

DRAWING PHASE:
- OWNER REVIEW
- ✓ AGENCY REVIEW
- BID DOCUMENT
- FOR CONSTRUCTION
- AS-BUILT DOCUMENT

I HEREBY CERTIFY THAT THIS PLAN, SPECIFICATION OR REPORT WAS PREPARED BY ME OR UNDER MY DIRECT SUPERVISION AND THAT I AM A DULY LICENSED PROFESSIONAL ENGINEER UNDER THE LAWS OF THE STATE OF MINNESOTA.

TODD A. ERICKSON, PE
LICENSE NO. 40418
DATE: 04/28/2017

OWNER/DEVELOPER
CHASE DEVELOPMENT
2140 COUNTY ROAD 42 WEST
BURNSVILLE, MN 55337

PROJECT TITLE
EASTON VILLAGE
3RD ADDITION
FINAL PLAN
LAKE ELMO, MINNESOTA

NO.	REVISION DESCRIPTION	DATE

JOB NO. 16-176

SHEET TITLE
CITY STANDARD DETAIL PLATES

SHEET NO.
C21
SHEET 21 OF 25

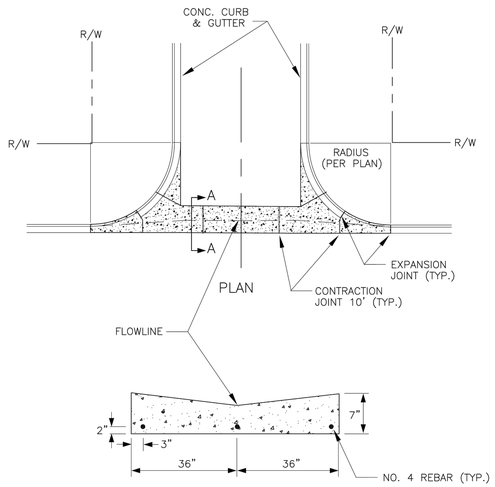

CONCRETE VALLEY GUTTER

MARCH 2017

THE CITY OF LAKE ELMO — CITY OF LAKE ELMO

STANDARD DRAWING NO. 505 LAKE ELMO

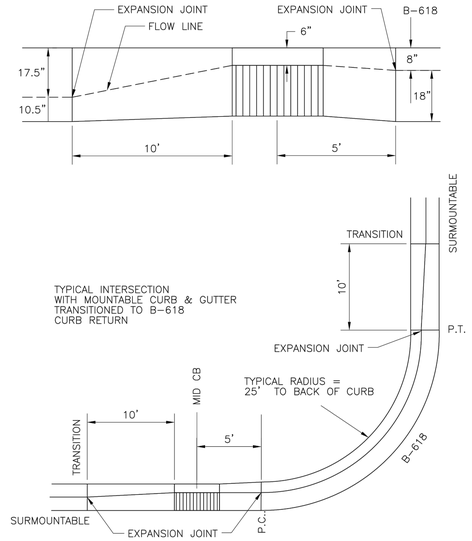

CATCH BASIN PLACEMENT AND CURB & GUTTER TRANSITION AT INTERSECTIONS

MARCH 2017

THE CITY OF LAKE ELMO — CITY OF LAKE ELMO

STANDARD DRAWING NO. 506 LAKE ELMO

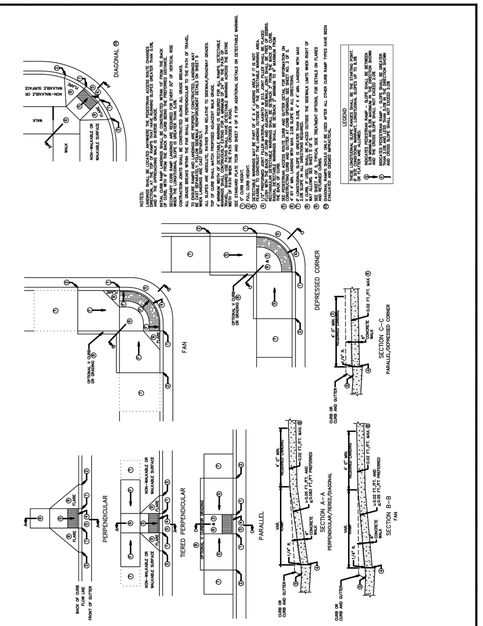

MnDOT STANDARD PLAN 5-297.250 SHEET 1 OF 5

MARCH 2017

THE CITY OF LAKE ELMO — CITY OF LAKE ELMO

STANDARD DRAWING NO. 507A LAKE ELMO

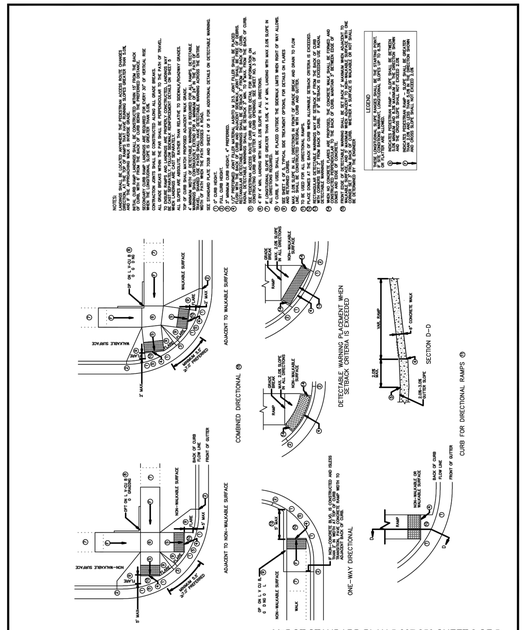

MnDOT STANDARD PLAN 5-297.250 SHEET 2 OF 5

MARCH 2017

THE CITY OF LAKE ELMO — CITY OF LAKE ELMO

STANDARD DRAWING NO. 507B LAKE ELMO

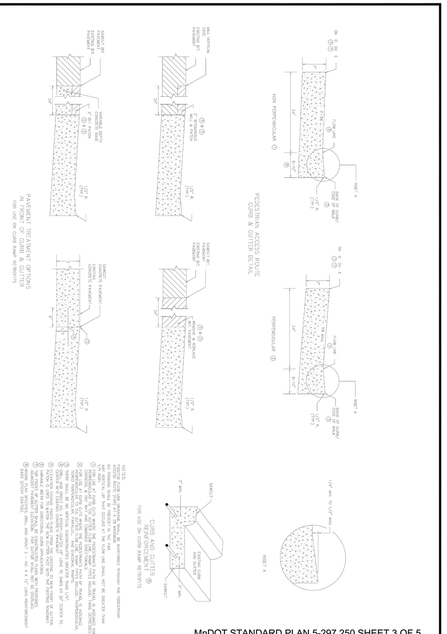

MnDOT STANDARD PLAN 5-297.250 SHEET 3 OF 5

FEBRUARY 2015

THE CITY OF LAKE ELMO — CITY OF LAKE ELMO

STANDARD DRAWING NO. 507C LAKE ELMO

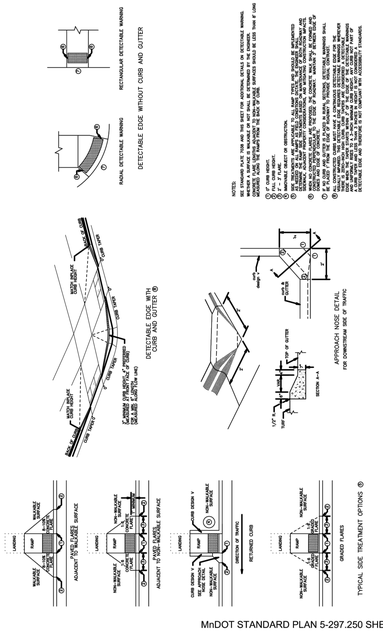

MnDOT STANDARD PLAN 5-297.250 SHEET 4 OF 5

MARCH 2017

THE CITY OF LAKE ELMO — CITY OF LAKE ELMO

STANDARD DRAWING NO. 507D LAKE ELMO

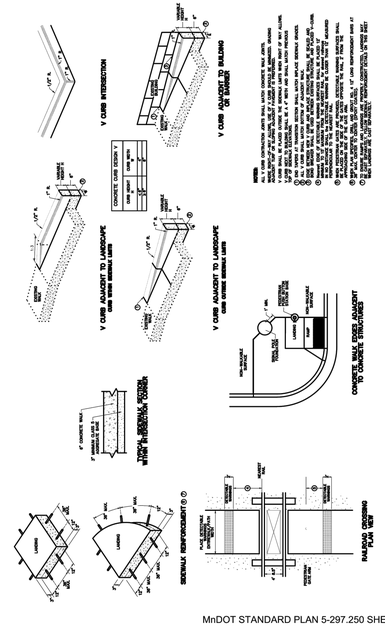

MnDOT STANDARD PLAN 5-297.250 SHEET 5 OF 5

MARCH 2017

THE CITY OF LAKE ELMO — CITY OF LAKE ELMO

STANDARD DRAWING NO. 507E LAKE ELMO

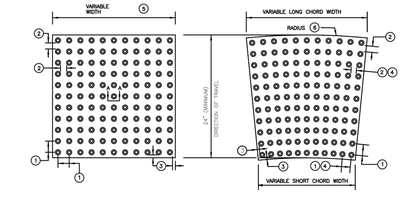

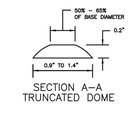

TYPICAL RADIAL TRUNCATED DOME PLATES			
RADIUS (FEET) 7	LONG CHORD WIDTH (INCHES)	SQ. FT. PER PLATE	PLATES REQUIRED FOR 90 DEGREE TURN
10	23–1/2	3.53	8
15	18–13/16	2.63	15
15	23–1/2	3.67	12
20	18–13/16	3.00	[illegible]
20	18–7/8	2.98	30
25	20–1/2	3.28	23
25	23–9/16	3.77	20
30	22–5/8	3.65	25
35	22	3.56	30

NOTES:

DETECTABLE WARNING SURFACES SHALL FOLLOW THE PUBLIC RIGHTS–OF–WAY ACCESSIBILITY GUIDELINES (PROWAG).

DETECTABLE WARNINGS CONSIST OF TRUNCATED DOMES ALIGNED IN A SQUARE OR RADIAL GRID PATTERN.

DETECTABLE WARNINGS ARE REQUIRED:
–WHERE RAMPS, LANDINGS, OR BLENDED TRANSITIONS PROVIDE A FLUSH PEDESTRIAN CONNECTION TO THE ROADWAY.
–WHERE PEDESTRIAN ACCESS ROUTES CROSS COMMERCIAL DRIVEWAYS THAT ARE PROVIDED WITH TRAFFIC CONTROL DEVICES OR OTHERWISE PERMITTED TO OPERATE LIKE A PUBLIC ROADWAY.
–AT PEDESTRIAN RAILWAY CROSSINGS.
–ON RAIL PLATFORMS WHERE BOARDING EDGES ARE NOT PROTECTED.

DETECTABLE WARNINGS SHALL EXTEND:
–A MINIMUM OF 24" IN THE DIRECTION OF TRAVEL.
–THE FULL WIDTH OF THE RAMP, LANDING, OR BLENDED TRANSITION, WITHIN 2" OF FULL WIDTH ON EITHER END.
–THE FULL LENGTH OF THE PUBLIC USE AREA OF A RAIL PLATFORM.

DETECTABLE WARNING SURFACES SHALL CONTRAST VISUALLY WITH ADJACENT GUTTER, ROADWAY, OR WALKWAY, EITHER A LIGHT–ON–DARK OR DARK–ON–LIGHT. CONTRAST MAY BE PROVIDED ON THE FULL RAMP SURFACE, EXCLUDING THE FLARED SIDES.

TRUNCATED DOME PANELS SHALL BE FROM MNDOT'S APPROVED/ QUALIFIED PRODUCT LISTS. PANELS SHALL BE CAST IRON.

DETECTABLE WARNING SURFACE SHALL BE PAID FOR AS TRUNCATED DOMES BY THE SQUARE FOOT.

ALL TRUNCATED DOME SYSTEMS SHALL BE PLACED IN STRICT ACCORDANCE WITH THE RECOMMENDATIONS OF THE MANUFACTURER.

1. CENTER TO CENTER DOME SPACING: 1.6" MINIMUM, 2.4" MAXIMUM.
2. BASE TO BASE DOME SPACING: 0.65" MINIMUM.
3. DOME BASE TO PLATE EDGE SPACING: 0.35" MINIMUM, 0.75" MAXIMUM.
4. SPACING VARIES ON RADIAL PLATES.
5. TYPICAL WIDTHS AVAILABLE: 12", 18", 24", 30", 36", CHECK WITH MANUFACTURERS FOR AVAILABLE WIDTHS.
6. ON RADIAL PLATE, RADIUS DEFINED AT BACK OF CURB.
7. TYPICAL RADII. CHECK WITH MANUFACTURERS FOR AVAILABLE RADII.

DETECTABLE WARNING SURFACE– TRUNCATED DOMES

MARCH 2017

THE CITY OF LAKE ELMO — CITY OF LAKE ELMO

STANDARD DRAWING NO. 508 LAKE ELMO

ERICKSON CIVIL
333 North Main Street, Suite 201
Stillwater, Minnesota 55082
Phone (612) 309-3804
www.ericksoncivilsite.com

DRAWING PHASE:
- OWNER REVIEW
- ✓ AGENCY REVIEW
- BID DOCUMENT
- FOR CONSTRUCTION
- AS-BUILT DOCUMENT

I HEREBY CERTIFY THAT THIS PLAN, SPECIFICATION OR REPORT WAS PREPARED BY ME OR UNDER MY DIRECT SUPERVISION AND THAT I AM A DULY LICENSED PROFESSIONAL ENGINEER UNDER THE LAWS OF THE STATE OF MINNESOTA.

TODD A. ERICKSON, PE
LICENSE NO. 40418
DATE: 04/28/2017

OWNER/DEVELOPER
CHASE DEVELOPMENT
2140 COUNTY ROAD 42 WEST
BURNSVILLE, MN 55337

PROJECT TITLE
EASTON VILLAGE
3RD ADDITION
FINAL PLAN
LAKE ELMO, MINNESOTA

NO.	REVISION DESCRIPTION	DATE

JOB NO. 16-176

SHEET TITLE
CITY STANDARD DETAIL PLATES

SHEET NO.
C22
SHEET 22 OF 25

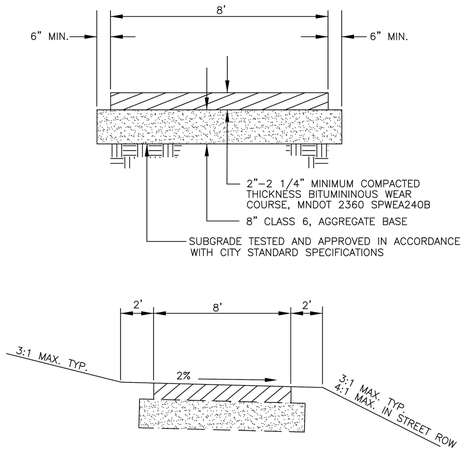

NOTE
1. BITUMINOUS TRAILS SHALL HAVE CONCRETE PED RAMPS AT ALL STREET INTESECTIONS.
2. PROVIDE 2% CROSS-SLOPE TO MAINTAIN POSITIVE DRAINAGE AWAY FROM TRAIL SURFACE THROUGHOUT LENGTH OF TRAIL.

BICYCLE-PEDESTRIAN PATH

MARCH 2017

CITY OF LAKE ELMO | STANDARD DRAWING NO. 509 | LAKE ELMO

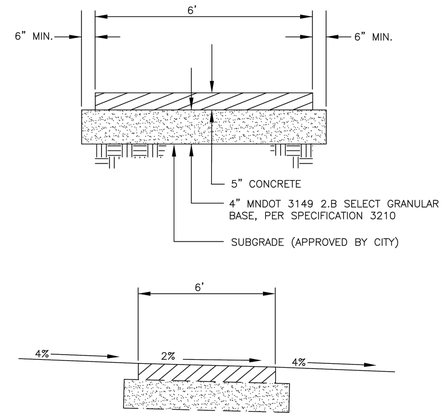

NOTE
1. SIDEWALKS SHALL HAVE CONCRETE PED RAMPS AT ALL STREET INTESECTIONS.
2. PROVIDE 2% CROSS-SLOPE TO MAINTAIN POSITIVE DRAINAGE AWAY FROM SIDEWALK THROUGHOUT LENGTH OF WALK.

CONCRETE SIDEWALK

MARCH 2017

CITY OF LAKE ELMO | STANDARD DRAWING NO. 510 | LAKE ELMO

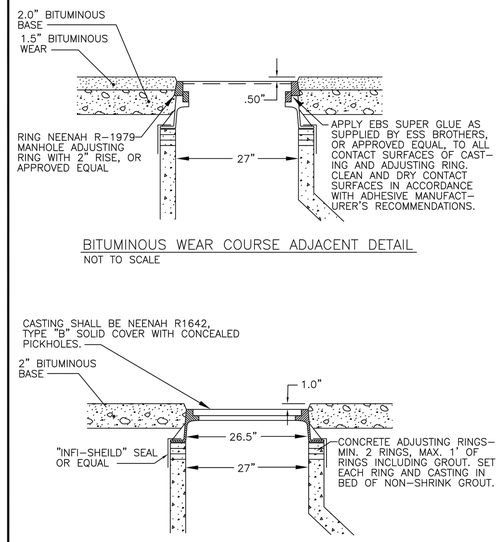

BITUMINOUS WEAR COURSE ADJACENT DETAIL
NOT TO SCALE

BITUMINOUS BASE COURSE ADJACENT DETAIL
NOT TO SCALE

MANHOLE CASTING ADJUSTMENT

MARCH 2017

CITY OF LAKE ELMO | STANDARD DRAWING NO. 511 | LAKE ELMO

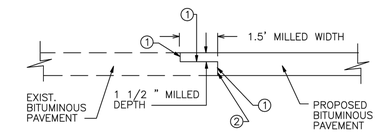

MILLED LAP JOINT SHALL BE CONSTRUCTED WHERE MATCHING INTO EXISTING BITUMINOUS PAVEMENT. MILL IMMEDIATELY PRIOR TO CONSTRUCTING BITUMINOUS WEARING COURSE.

NOTES:
1. APPLY BITUMINOUS TACK COAT, MnDOT SPEC. 2357.
2. SAW BITUMINOUS PAVEMENT FULL DEPTH TO ESTABLISH A NEAT LINE FROM WHICH TO EXTEND THE NEW WORK.

MILLED LAP JOINT

MARCH 2017

CITY OF LAKE ELMO | STANDARD DRAWING NO. 512 | LAKE ELMO

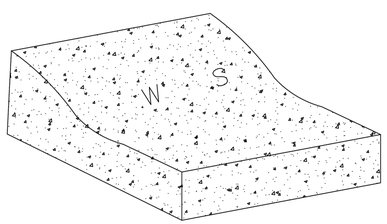

W-RELATIVE CURB STOP LOCATION
S-RELATIVE SANITARY SEWER SERVICE LOCATION

NOTES:
1. CURB MARKERS ARE AVAILABLE FROM CITY HALL.
2. CURB MARKINGS SHALL BE POSITIONED IN THE FACE OF THE CURB, WHILE THE CONCRETE IS IN A PLASTIC STATE, PERPENDICULAR TO THE LOCATION OF CURB STOPS.
3. WHERE B6XX CURB IS USED, PLACE CURB MARKING ON FACE OF CURB.

CONCRETE CURB MARKING
(FOR CURB STOPS)

MARCH 2017

CITY OF LAKE ELMO | STANDARD DRAWING NO. 513 | LAKE ELMO

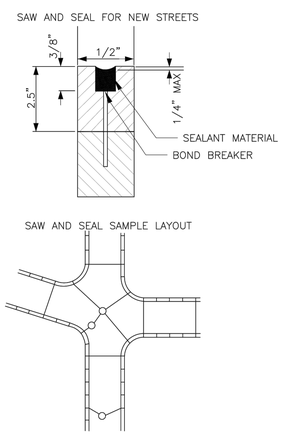

NOTES:
1. SAW AND SEAL CUT LOCATIONS SHALL BE PLACED EVERY 40 FEET AND AT MANHOLES OR DIRECTED BY ENGINEER.
2. SAW AND SEAL CUT SHALL BE STRAIGHT AND MATCH JOINTS IN CURB AND GUTTER.
3. JOINTS TO BE BLOWN CLEAN AND DRIED WITH A HEAT LANCE IMMEDIATELY BEFORE SEALING.
4. CONTRACTOR TO SETUP AND MAINTAIN TRAFFIC CONTROL, IN ACCORDANCE WITH MUTCD APPENDIX B, INCLUDING FLAGGERS.
5. BOND BREAKER TAPE IS OPTIONAL.

SAW AND SEAL

MARCH 2017

CITY OF LAKE ELMO | STANDARD DRAWING NO. 514 | LAKE ELMO

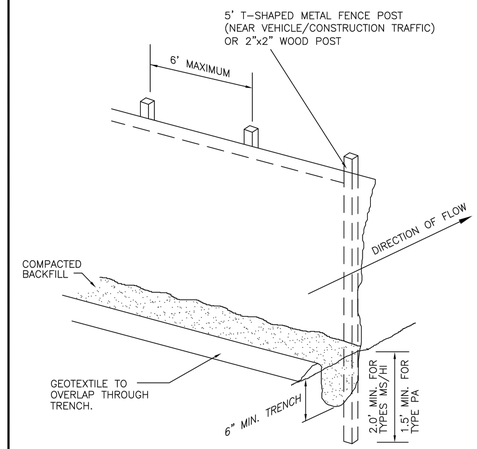

NOTE : -SILT FENCE INSTALLATION SHALL CONFORM TO MNDOT2573.3, TYPE MS/HI NEAR VEHICLE/CONSTRUCTION TRAFFIC, TYPE PA AT ALL OTHER LOCATIONS.
-MATERIALS SHALL CONFORM TO MNDOT 3886.

SILT FENCE

MARCH 2017

CITY OF LAKE ELMO | STANDARD DRAWING NO. 601 | LAKE ELMO

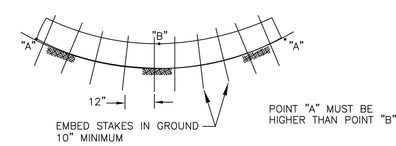

DITCH SECTION

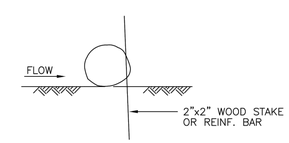

FIBER ROLL SECTION

NOTE:
STAKE TO BE INSTALLED AT AN ANGLE OF APPROXIMATELY 45° ON THE DOWNSTREAM SIDE OF THE FIBER ROLL. ENSURE THAT STAKE DOES NOT PUSH DOWN THE FIBER ROLL FROM ITS FULL HEIGHT.

DITCH CHECK (FIBER ROLL)

MARCH 2017

CITY OF LAKE ELMO | STANDARD DRAWING NO. 603 | LAKE ELMO

ERICKSON CIVIL
333 North Main Street, Suite 201
Stillwater, Minnesota 55082
Phone (612) 309-3804
www.ericksoncivilsite.com

DRAWING PHASE:
- OWNER REVIEW
- ✓ AGENCY REVIEW
- BID DOCUMENT
- FOR CONSTRUCTION
- AS-BUILT DOCUMENT

I HEREBY CERTIFY THAT THIS PLAN, SPECIFICATION OR REPORT WAS PREPARED BY ME OR UNDER MY DIRECT SUPERVISION AND THAT I AM A DULY LICENSED PROFESSIONAL ENGINEER UNDER THE LAWS OF THE STATE OF MINNESOTA.

TODD A. ERICKSON, PE
LICENSE NO. 40418
DATE: 04/28/2017

OWNER/DEVELOPER
CHASE DEVELOPMENT
2140 COUNTY ROAD 42 WEST
BURNSVILLE, MN 55337

PROJECT TITLE
EASTON VILLAGE
3RD ADDITION
FINAL PLAN
LAKE ELMO, MINNESOTA

NO.	REVISION DESCRIPTION	DATE

JOB NO. 16-176

SHEET TITLE
CITY STANDARD DETAIL PLATES

SHEET NO.
C23
SHEET 23 OF 25

NOTE: MAINTAIN AND CLEAN OUT DEVICES AS NECESSARY TO ACHIEVE PROPER FLOW OF STORM WATER INTO STORM SYSTEM.

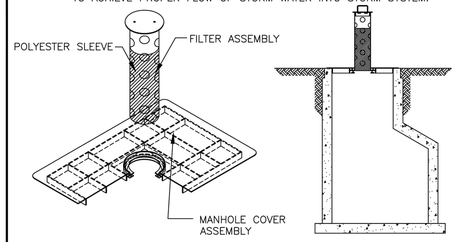

WIMCO RD-23 OR APPROVED EQUAL

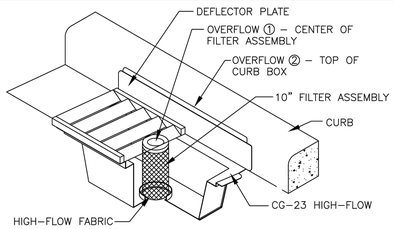

WIMCO CG-23 HIGH-FLOW OR APPROVED EQUAL

SEDIMENT CONTROL AROUND STORM SEWER INLET

MARCH 2017

CITY OF LAKE ELMO

STANDARD DRAWING NO. 604 LAKE ELMO

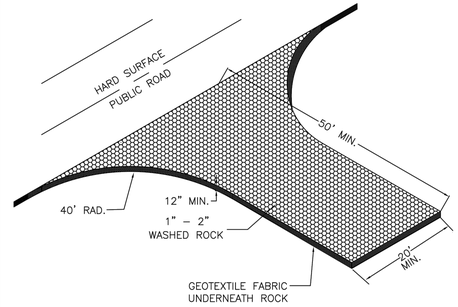

NOTES:

① MAXIMUM WIDTH OF CONSTRUCTION ENTRANCE IS 24 FEET.

② A MNDOT 3733 TYPE V GEOTEXTILE FABRIC SHALL BE USED UNDER THE ROCK TO PREVENT MIGRATION OF THE UNDERLYING SOIL INTO THE STONE.

③ CONSTRUCTION ENTRANCE IS REQUIRED FOR ALL NEW HOME CONSTRUCTION AND NEW STREET CONSTRUCTION.

④ CONSTRUCTION ENTRANCE SHALL BE MAINTAINED TO PREVENT TRACKING OF MUD ONTO ROADWAYS THAT ADJOIN THE PROJECT. THIS WILL REQUIRE PERIODIC TOP DRESSING WITH ADDITIONAL ROCK OR REMOVAL AND REINSTALLATION OF THE ROCK ENTRANCE.

⑤ REMOVE MUD AND DEBRIS FROM TIRES AND VEHICLE UNDERCARRIAGE PRIOR TO LEAVING THE SITE.

ROCK CONSTRUCTION ENTRANCE

MARCH 2017

CITY OF LAKE ELMO

STANDARD DRAWING NO. 605 LAKE ELMO

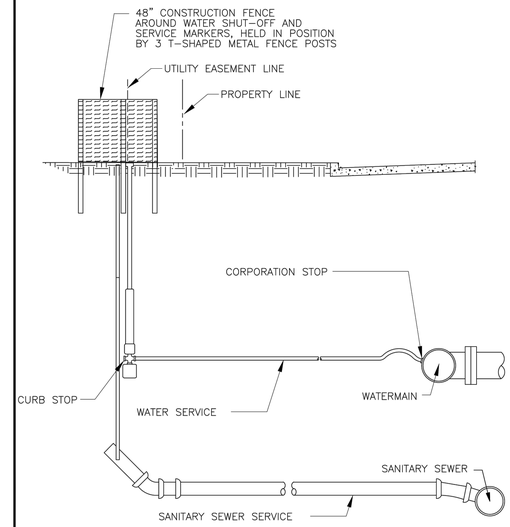

TYPICAL SERVICE PROTECTION

MARCH 2017

CITY OF LAKE ELMO

STANDARD DRAWING NO. 606 LAKE ELMO

DIMENSION	30" PANEL	36" PANEL	42" PANEL	48" PANEL
A	30"	36"	42"	48"
B	29.5"	35.5"	41.5"	47.5"
C	20"	26"	N/A	38"
D	2.095"	2.095"	2.095"	2.095"
E	4.06"	4.07"	4.06"	4.06"
F	2.095"	2.095"	2.095"	2.095"
G	1"	1"	1"	1"
H	6.38	6.38"	6.38"	6.38"
I	1"	1"	1"	1"
J	6"	6"	6"	6"
K	8.25"	8.25"	8.25"	8.25"
L	8.75"	8.75"	8.75"	8.75"
M	1.0"	1"	1"	1"

NOTE:

- 9" HIGH STREET SIGN PLATES EXTRUDED
- LONGER NAME SIGN ON BOTTOM
- HIGHER VOLUME STREET SIGN TO BE PLACED ON BOTTOM
- STREET SIGNS TO BE PLACED TO EITHER THE SOUTHEAST OR NORTHWEST CORNER OF CORNER OF THE INTERSECTION
- 812 ROUND CAP AND 812 CROSS PIECE
- REFLECTIVITY IS TO BE TYPE IX DIAMOND GRADE (DG3)
- SUFFIXES SHALL BE LOWERCASE FOR ALL NUMBERED STREET NAMES (30th St N)

POSTS:

- STOP SIGNS TO BE PLACED ON STREET SIGN POSTS PER MMUTCD WHEN APPLICABLE
- 2" X 2' X 12' 14 GAUGE PRE PUNCHED POST
- BR952 – BR4 BRACKET, NEW STYLE

STREET SIGNS

MARCH 2017

CITY OF LAKE ELMO

STANDARD DRAWING NO. 706 LAKE ELMO

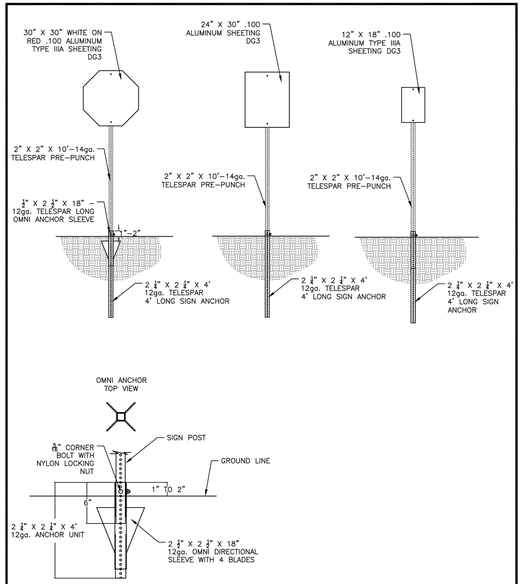

SQUARE TUBE SIGN STANDARD WITH OMNI BASE

MARCH 2017

CITY OF LAKE ELMO

STANDARD DRAWING NO. 707 LAKE ELMO

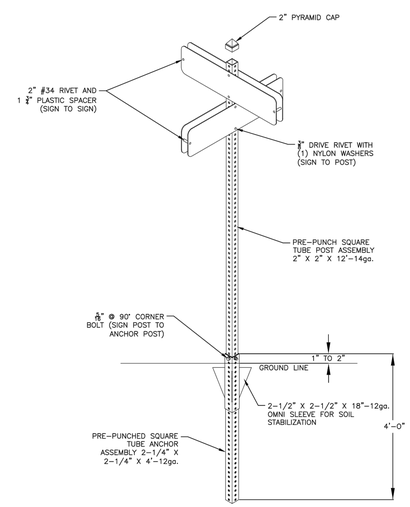

PRE-PUNCH SQUARE TUBE STREET NAME SIGN POST DETAIL

MARCH 2017

CITY OF LAKE ELMO

STANDARD DRAWING NO. 708 LAKE ELMO

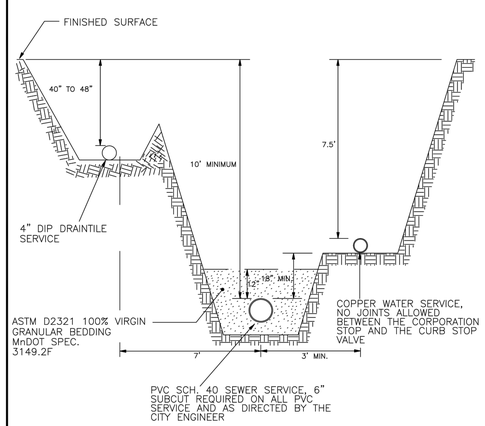

NOTE: IF 18" OF VERTICAL SEPARATION BETWEEN THE SANITARY SERVICE AND WATER SERVICE CAN NOT BE MAINTAINED 10' OF HORIZONTAL SEPARATION IS REQUIRED.

SANITARY, WATER & DRAIN TILE SERVICE INSTALLATION

FEBRUARY 2015

CITY OF LAKE ELMO

STANDARD DRAWING NO. 712 LAKE ELMO

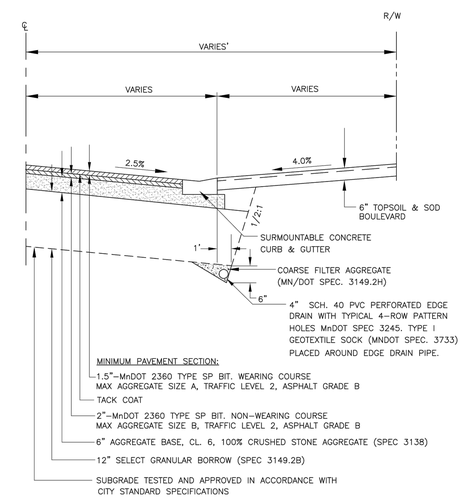

NOTE:
1. TACK FACE OF GUTTER PRIOR TO BOTH LIFTS OF BITUMINOUS
2. 4" SCH. 40 PVC PERFORATED EDGE DRAIN REQUIRED AT ALL LOW POINTS. EDGE DRAIN DESIGN PER APPROVAL OF CITY ENGINEER.

TYPICAL LOCAL RESIDENTIAL STREET SECTION
(MINIMUM 7-TON DESIGN)

MARCH 2017

CITY OF LAKE ELMO

STANDARD DRAWING NO. 801 LAKE ELMO

ERICKSON CIVIL
333 North Main Street, Suite 201
Stillwater, Minnesota 55082
Phone (612) 309-3804
www.ericksoncivilsite.com

DRAWING PHASE:

	OWNER REVIEW
✓	AGENCY REVIEW
	BID DOCUMENT
	FOR CONSTRUCTION
	AS-BUILT DOCUMENT

I HEREBY CERTIFY THAT THIS PLAN, SPECIFICATION OR REPORT WAS PREPARED BY ME OR UNDER MY DIRECT SUPERVISION AND THAT I AM A DULY LICENSED PROFESSIONAL ENGINEER UNDER THE LAWS OF THE STATE OF MINNESOTA.

TODD A. ERICKSON, PE

LICENSE NO. 40418

DATE: 04/28/2017

OWNER/DEVELOPER
CHASE DEVELOPMENT
2140 COUNTY ROAD 42 WEST
BURNSVILLE, MN 55337

PROJECT TITLE
EASTON VILLAGE
3RD ADDITION
FINAL PLAN
LAKE ELMO, MINNESOTA

NO.	REVISION DESCRIPTION	DATE

JOB NO. 16-176

SHEET TITLE
CITY STANDARD DETAIL PLATES

SHEET NO.
C24

SHEET 24 OF 25

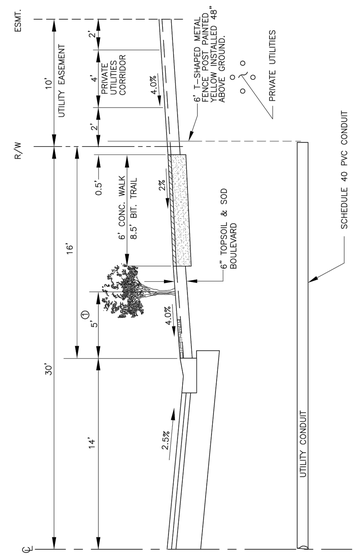

NOTES:
1. PLACE BOULEVARD TREES 5 FEET BACK OF CURB WHEN SIDEWALK OR TRAIL IS PRESENT; 8 FEET BACK OF CURB WITH NO SIDEWALK OR TRAIL.
2. STREET LIGHTS/HYDRANTS SHALL BE LOCATED 5 FEET BACK OF CURB.

TYPICAL RIGHT OF WAY LAYOUT

MARCH 2017

THE CITY OF LAKE ELMO — CITY OF LAKE ELMO

STANDARD DRAWING NO. 805

LAKE ELMO

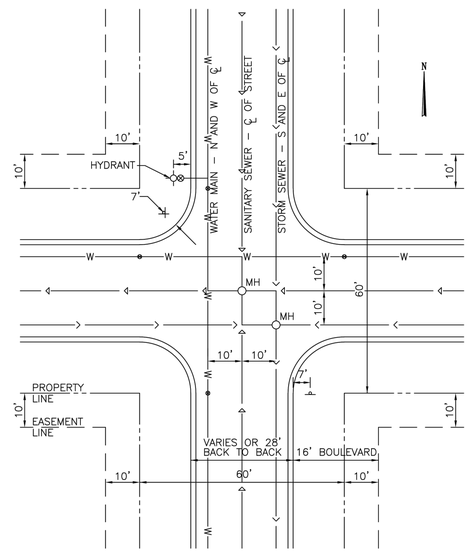

URBAN STREET UTILITY LOCATION

MARCH 2017

THE CITY OF LAKE ELMO — CITY OF LAKE ELMO

STANDARD DRAWING NO. 806

LAKE ELMO

NOTE: POSITIVE DRAINAGE MUST BE MAINTAINED, BITUMINOUS CURB MAY BE USED AS NECESSARY.

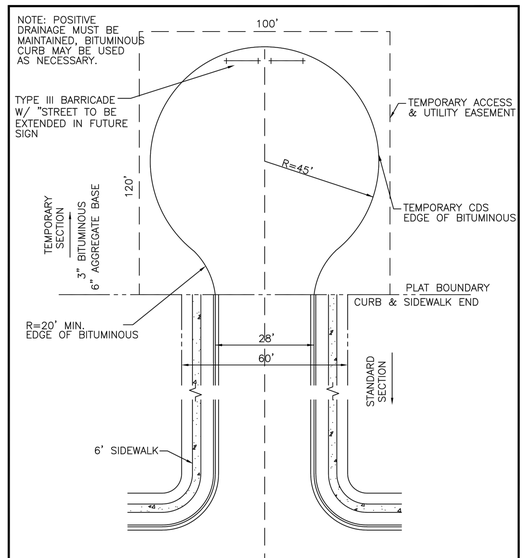

TEMPORARY CUL–DE–SAC TYPE B

MARCH 2017

THE CITY OF LAKE ELMO — CITY OF LAKE ELMO

STANDARD DRAWING NO. 807B

LAKE ELMO

ERICKSON CIVIL
333 North Main Street, Suite 201
Stillwater, Minnesota 55082
Phone (612) 309-3804
www.ericksoncivilsite.com

DRAWING PHASE:

	OWNER REVIEW
✓	AGENCY REVIEW
	BID DOCUMENT
	FOR CONSTRUCTION
	AS-BUILT DOCUMENT

I HEREBY CERTIFY THAT THIS PLAN, SPECIFICATION OR REPORT WAS PREPARED BY ME OR UNDER MY DIRECT SUPERVISION AND THAT I AM A DULY LICENSED PROFESSIONAL ENGINEER UNDER THE LAWS OF THE STATE OF MINNESOTA.

TODD A. ERICKSON, PE

LICENSE NO. 40418

DATE: 04/28/2017

OWNER/DEVELOPER
CHASE DEVELOPMENT
2140 COUNTY ROAD 42 WEST
BURNSVILLE, MN 55337

PROJECT TITLE
EASTON VILLAGE
3RD ADDITION
FINAL PLAN
LAKE ELMO, MINNESOTA

NO.	REVISION DESCRIPTION	DATE

JOB NO. 16-176

SHEET TITLE
CITY STANDARD DETAIL PLATES

SHEET NO.
C25

SHEET 25 OF 25

EXISTING SAVED TREES / NO REMOVAL

TREE ID	SIZE / TYPE	COMMON INCHES	HARDWOOD INCHES	CONIFEROUS INCHES
96	8 SPRUCE			8
97	6 SPRUCE			8
98	8 SPRUCE			8
99	18 BOX ELDER	18		
104	8 SPRUCE			8
105	10 SPRUCE			10
106	10 SPRUCE			10
107	20 WHITE PINE			20
108	20 WHITE PINE			20
148	12 SPRUCE			12
149	10 SPRUCE			10
150	14 HACK BERRY	14		
217	18 BOX ELDER	18		

PLANTING SCHEDULE

	OVERSTORY TREES	Latin Name	Quantity	Size	Type	Notes
WO	White Oak	Quercus alba	10	2-1/2" Dia.	B+B	
AB	Autumn Blaze Maple	Acer x freemanii 'Jeffersred'	14	2-1/2" Dia.	B+B	
AE	Accolade Elm	Ulmus 'Morton'	8	2-1/2" Dia.	B+B	
HB	Hackberry	Celtis occidentalis	16	2-1/2" Dia.	B+B	
RM	Red Maple	Acer rubrum	6	2-1/2" Dia.	B+B	
PC	Prairie Fire Crab Apple	Malus 'Prairie Fire'	9	1-1/2" Dia.	B+B	
NS	Norway Spruce	Picea abies	16	6-ft	B+B	

N

50 0 50 100 150 FEET

GRAPHIC SCALE

Legend

- EASTON VILLAGE 2ND ADDITION BOUNDARY
- 15-FT POLE WITH ORNAMENTAL LIGHT, XCEL ENERGY "ACRON" LAMP.
- UTILITY EASEMENT
- PROPOSED DECIDUOUS TREE
- PROPOSED CONIFEROUS TREE
- PROPOSED ORNAMENTAL TREE
- PROPOSED SILT FENCING (FOR TREE PROTECTION)

NOTE:

1) Tree Planting Contractor to Field Stake all Trees located on City Outlots and All Right of Way Areas for Approval by City Landscape Architect Prior to Planting. Notify City Landscape Architect via writing once tree in locations are staked and allow for up to two weeks for Landscape Architect to schedule and complete on-site review with Tree Planting Contractor.

ERICKSON CIVIL
333 North Main Street, Suite 201
Stillwater, Minnesota 55082
Phone (612) 309-3804
www.ericksoncivilsite.com

DRAWING PHASE:

	OWNER REVIEW
	AGENCY REVIEW
	BID DOCUMENT
✓	FOR CONSTRUCTION
	AS-BUILT DOCUMENT

I HEREBY CERTIFY THAT THIS PLAN, SPECIFICATION OR REPORT WAS PREPARED BY ME OR UNDER MY DIRECT SUPERVISION AND THAT I AM A DULY LICENSED PROFESSIONAL LANDSCAPE ARCHITECT UNDER THE LAWS OF THE STATE OF MINNESOTA.

DAVID CHMIELEWSKI

LICENSE NO. 40639

DATE: 04/28/2017

OWNER/DEVELOPER
CHASE DEVELOPMENT
2140 COUNTY ROAD 42 WEST
BURNSVILLE, MN 55337

PROJECT TITLE
EASTON VILLAGE
3RD ADDITION
FINAL PLAN
LAKE ELMO, MINNESOTA

NO.	REVISION DESCRIPTION	DATE
1	City Review	6-21-17

JOB NO. 16-176

SHEET TITLE
LANDSCAPE PLAN & TREE SURVEY

SHEET NO.
L1

SHEET 1 OF 2

CITY OF LAKE ELMO

APRIL 2017

Notes:
1- Refer to specification 329000 for additional requirements.

2- Amend Planting Soil with MnDOT 3881 B.4 Type 4 Natural Based Fertilizer and MnDOT 3896C or 3896G Additives

3- Mulch ring for individually planted trees shall be a minimum diameter of 4-feet.

4- Remove all nursery twine at trunk at time of planting.

5- No staking allowed unless requested and granted in writing by City.

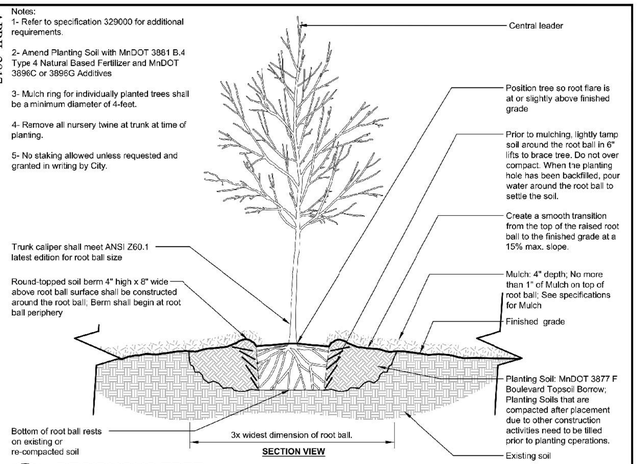

902a DECIDUOUS TREE

STANDARD DRAWING NO. 902a
LAKE ELMO

CITY OF LAKE ELMO

APRIL 2017

Notes:
1- Refer to specification 329000 for additional requirements.

2- Amend Planting Soil with MnDOT 3881 B.4 Type 4 Natural Based Fertilizer and MnDOT 3896C or 3896G Additives

3- Mulch ring for individually planted trees shall be a minimum diameter of 4-feet.

4- Remove all nursery twine at trunk at time of planting.

5- No staking allowed unless requested and granted in writing by City.

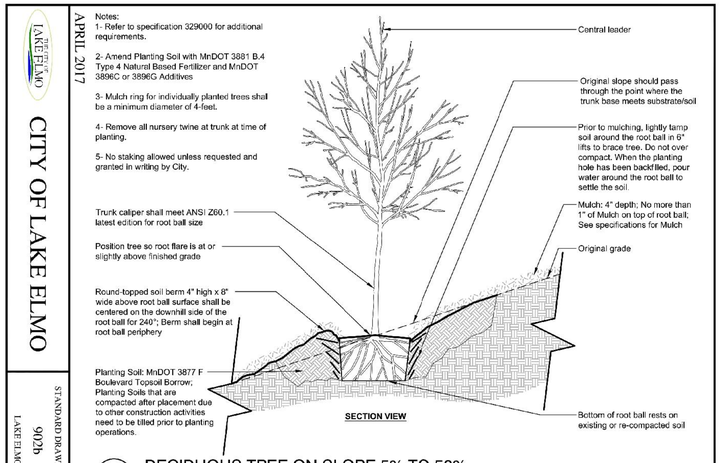

902b DECIDUOUS TREE ON SLOPE 5% TO 50%

STANDARD DRAWING NO. 902b
LAKE ELMO

CITY OF LAKE ELMO

APRIL 2017

Notes:
1- Refer to specification 329000 for additional requirements.

2- Amend Planting Soil with MnDOT 3881 B.4 Type 4 Natural Based Fertilizer and MnDOT 3896C or 3896G Additives

3- Mulch ring for individually planted trees shall be a minimum diameter of 6-feet or to extent of lower limbs whichever is greater.

4- Remove all nursery twine at trunk at time of planting.

5- No staking allowed unless requested and granted in writing by City.

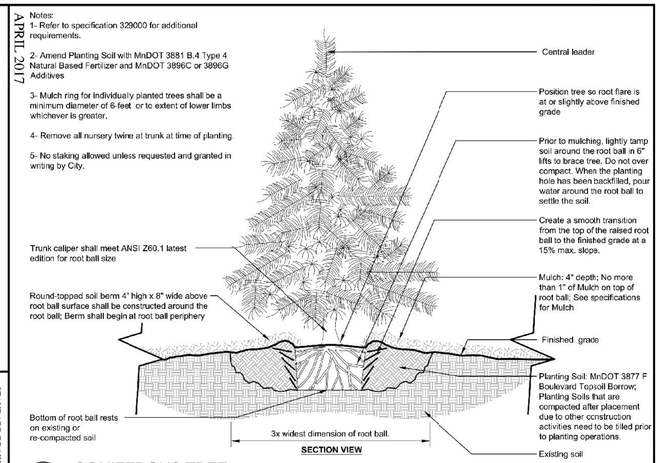

903a CONIFEROUS TREE

STANDARD DRAWING NO. 903a
LAKE ELMO

CITY OF LAKE ELMO

APRIL 2017

Notes:
1- Refer to specification 329000 for additional requirements.

2- Amend Planting Soil with MnDOT 3881 B.4 Type 4 Natural Based Fertilizer and MnDOT 3896C or 3896G Additives

3- Mulch ring for individually planted trees shall be a minimum diameter of 6-feet or to extent of lower limbs whichever is greater.

4- Remove all nursery twine at trunk at time of planting.

5- No staking allowed unless requested and granted in writing by City.

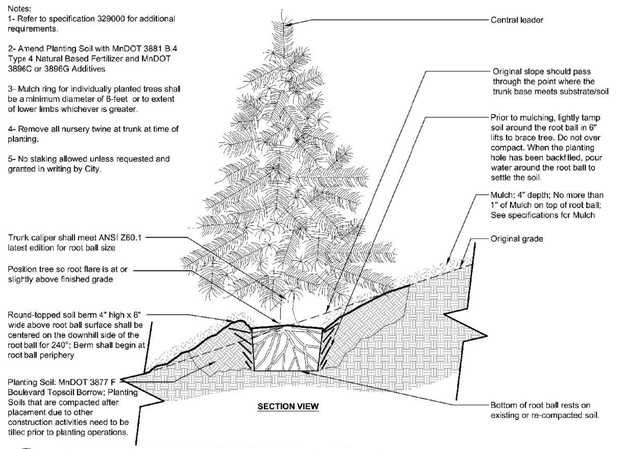

903b CONIFEROUS TREE ON SLOPE 5% TO 50%

STANDARD DRAWING NO. 903b
LAKE ELMO

ERICKSON CIVIL
333 North Main Street, Suite 201
Stillwater, Minnesota 55082
Phone (612) 309-3804
www.ericksoncivilsite.com

DRAWING PHASE:

	OWNER REVIEW
√	AGENCY REVIEW
	BID DOCUMENT
	FOR CONSTRUCTION
	AS-BUILT DOCUMENT

I HEREBY CERTIFY THAT THIS PLAN, SPECIFICATION OR REPORT WAS PREPARED BY ME OR UNDER MY DIRECT SUPERVISION AND THAT I AM A DULY LICENSED PROFESSIONAL LANDSCAPE ARCHITECT UNDER THE LAWS OF THE STATE OF

DAVID CHMIELEWSKI

LICENSE NO. 40639

DATE: 04/28/2017

OWNER/DEVELOPER
CHASE DEVELOPMENT
2140 COUNTY ROAD 42 WEST
BURNSVILLE, MN 55337

PROJECT TITLE
EASTON VILLAGE
3RD ADDITION
FINAL PLAN
LAKE ELMO, MINNESOTA

NO.	REVISION DESCRIPTION	DATE

JOB NO. 16-176

SHEET TITLE
LANDSCAPE PLAN DETAILS

SHEET NO.
L2
SHEET 2 OF 2

EASTON VILLAGE 3RD ADDITION

ERICKSON CIVIL
333 North Main Street, Suite 201
Stillwater, Minnesota 55082
Phone (612) 309-3804
www.ericksoncivilsite.com

KNOW ALL PERSONS BY THESE PRESENTS: Chase Development, Inc., a Minnesota Corporation, owner of the following described property:

ALL that Part of Outlot F, EASTON VILLAGE, WASHINGTON COUNTY, MINNESOTA, according to the recorded plat thereof, excepting all that part of EASTON VILLAGE 2ND ADDITION, WASHINGTON COUNTY, MINNESOTA.

Has caused the same to be surveyed and platted as EASTON VILLAGE 3RD ADDITION, and does hereby dedicate to the public for public use the public ways as shown on the plat, and the easements created by this plat for drainage and utility purposes only.

In witness whereof said Chase Development, Inc., a Minnesota Corporation, has caused these presents to be signed by its proper officer this_____ day of _____, 2017.

Signed: Chase Development, Inc.

By:_____

Andy Chase, President

STATE OF _____

COUNTY OF _____

This instrument was acknowledged before me on this _____ day of _____, 2017 by _____, President of Chase Development, Inc., a Minnesota Corporation, on behalf of the company.

_____

(PrintName)_____
Notary Public,_____
My commission expires_____

I, Paul A. Johnson, do hereby certify that this plat was prepared by me or under my direct supervision and that I am a duly Licensed Land Surveyor in the State of Minnesota, that this plat is a correct representation of the boundary survey; that all mathematical data and labels are correctly designated on this plat; that all monuments depicted on this plat have been correctly set; that all water boundaries and wet lands, as defined in Minnesota Statutes, Section 505.01, Subd. 3, as of the date of this certificate are shown and labeled on this plat; and all public ways are shown and labeled on this plat.
Signed and dated this _____ day of _____, 2017.

_____
Paul A. Johnson, Licensed Land Surveyor
Minnesota License Number 10938

STATE OF MINNESOTA
COUNTY OF WASHINGTON
This instrument was acknowledged before me on this _____ day of _____ 2017 by Paul A. Johnson, Licensed Land Surveyor.

_____
Todd A. Erickson, Notary Public, Minnesota
My commission expires January 31, 2019

This plat was approved by the City Council of Lake Elmo , Minnesota, this ____ day of _____, 2017, and hereby certifies compliance with all requirements as set forth in Minnesota Statutes, Section 505.03, Subd. 2.

Signed _____ Signed _____
Mayor Clerk

Approved by the Planning Commission of the City of Lake Elmo, Minnesota, this ____ day of _____, 2017.

Signed: _____ Signed _____
Chair, Planning Commission Secretary, Planning Commission

County Surveyor

Pursuant to Chapter 820, Laws of Minnesota, 1971, and in accordance with Minnesota Statutes, Section 505.021, Subd. 11, this plat has been reviewed and approved this _____ day of _____, 2017.

By:_____ By:_____
Washington County Surveyor

County Auditor/Treasurer

Pursuant to Minnesota Statutes, Section 505.021, Subd. 9, and Section 272.12, taxes payable in the year 2017, on real estate hereinbefore described, have been paid; and there are no delinquent taxes, and transfer has been entered, on this _____ day of _____, 2017.

By:_____ By:_____
Washington County Auditor/Treasurer Deputy

County Recorder

Document Number _____

I hereby certify that this instrument was recorded in the Office of the County Recorder for record on this _____ day of _____, 2017 at _____o'clock _____.M. and was duly recorded in Washington County Records.

By:_____ By:_____
Washington County Recorder Deputy

EASTON VILLAGE 3RD ADDITION

INSET A

ERICKSON CIVIL

333 North Main Street, Suite 201
Stillwater, Minnesota 55082
Phone (612) 309-3804

www.ericksoncivilsite.com

LEGEND

- ○ DENOTES SET ½ INCH BY 16 INCH IRON PIPE MONUMENT INSCRIBED "JOHNSON LS #10938", UNLESS SHOWN OTHERWISE
- ● DENOTES FOUND MONUMENT, SIZE AND MARKINGS AS INDICATED

NOTES

1) ORIENTATION OF THIS BEARING SYSTEM IS BASED ON THE WASHINGTON COUNTY COORDINATE SYSTEM (NAD 83).

N

100 0 100 200 300

1 INCH = 100 FEET

GRAPHIC SCALE IN FEET

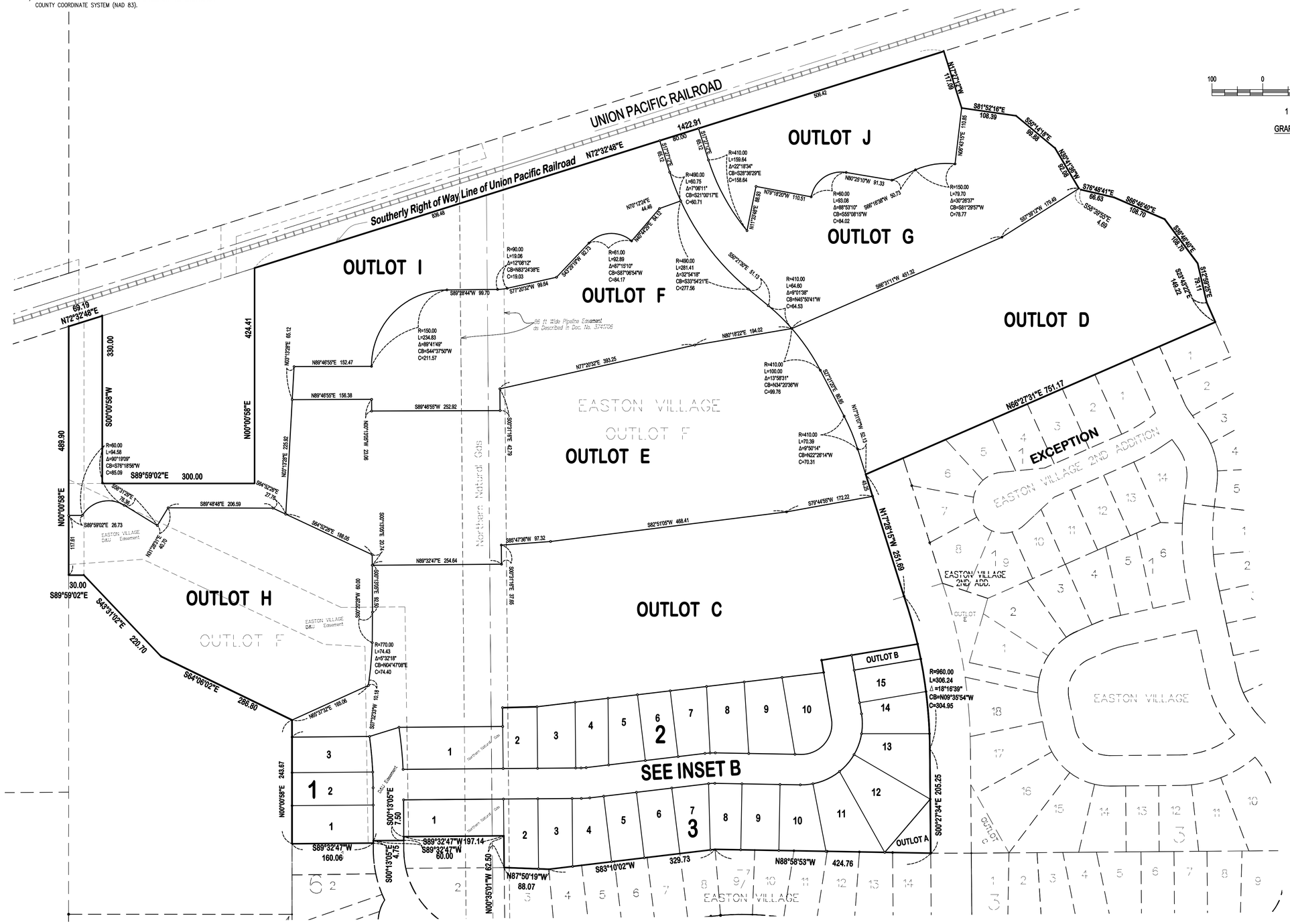

EASTON VILLAGE 3RD ADDITION

INSET B

ERICKSON CIVIL

333 North Main Street, Suite 201
Stillwater, Minnesota 55082
Phone (612) 309-3804

www.ericksoncivilsite.com

LEGEND

- ○ DENOTES SET ½ INCH BY 16 INCH IRON PIPE MONUMENT INSCRIBED "JOHNSON LS #10938", UNLESS SHOWN OTHERWISE
- ● DENOTES FOUND MONUMENT, SIZE AND MARKINGS AS INDICATED

NOTES

1) ORIENTATION OF THIS BEARING SYSTEM IS BASED ON THE WASHINGTON COUNTY COORDINATE SYSTEM (NAD 83).

EASEMENT DETAIL

DRAINAGE AND UTILITY EASEMENTS ARE SHOWN THUS:
(NOT TO SCALE)

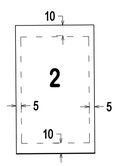

BEING 5 FEET IN WIDTH AND ADJOINING LOT LINES AND 10 FEET IN WIDTH AND ADJOINING RIGHT OF WAYS AND BLOCK LINES, AS SHOWN ON THE PLAT, UNLESS OTHERWISE INDICATED

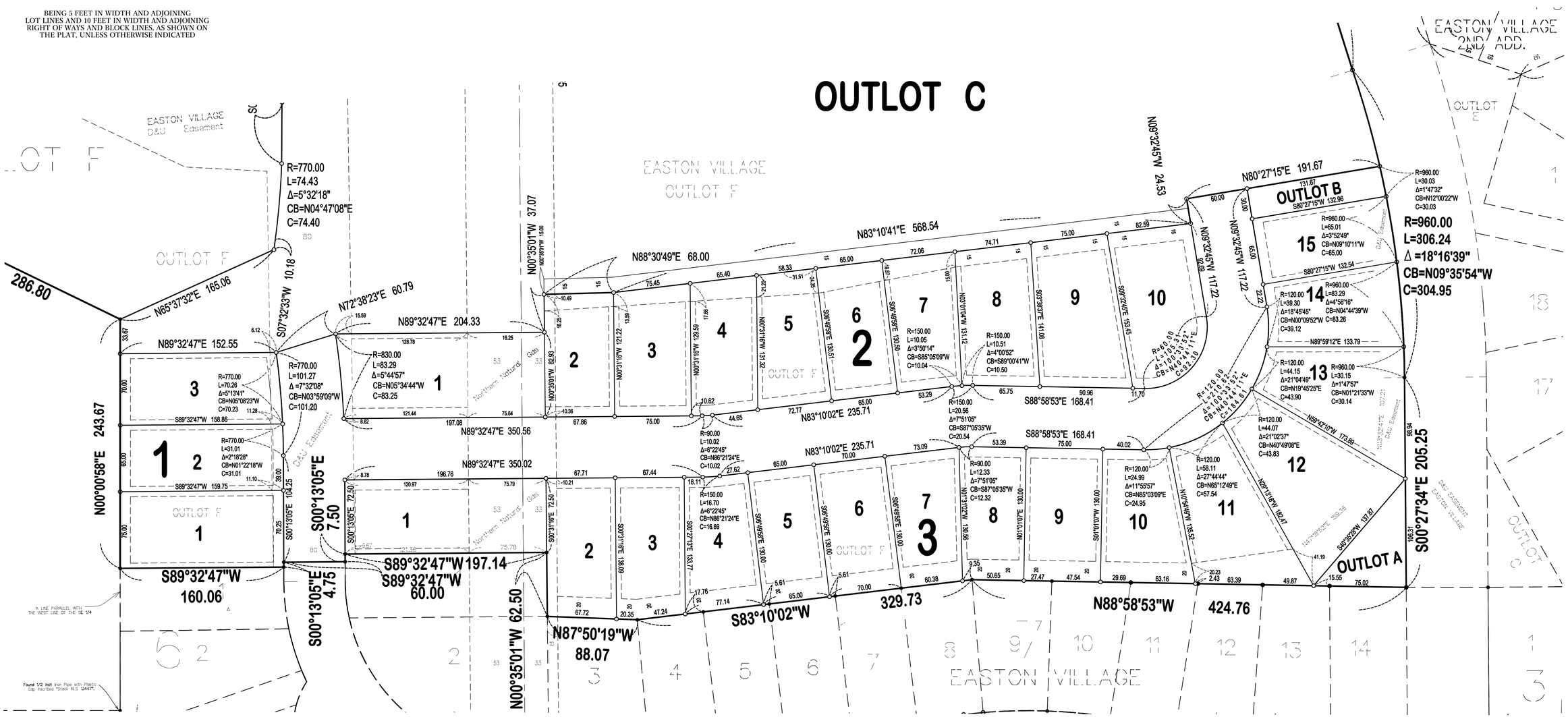

EASTON VILLAGE

LAKE ELMO, MINNESOTA

PRELIMINARY PLAT

MARCH 16, 2015

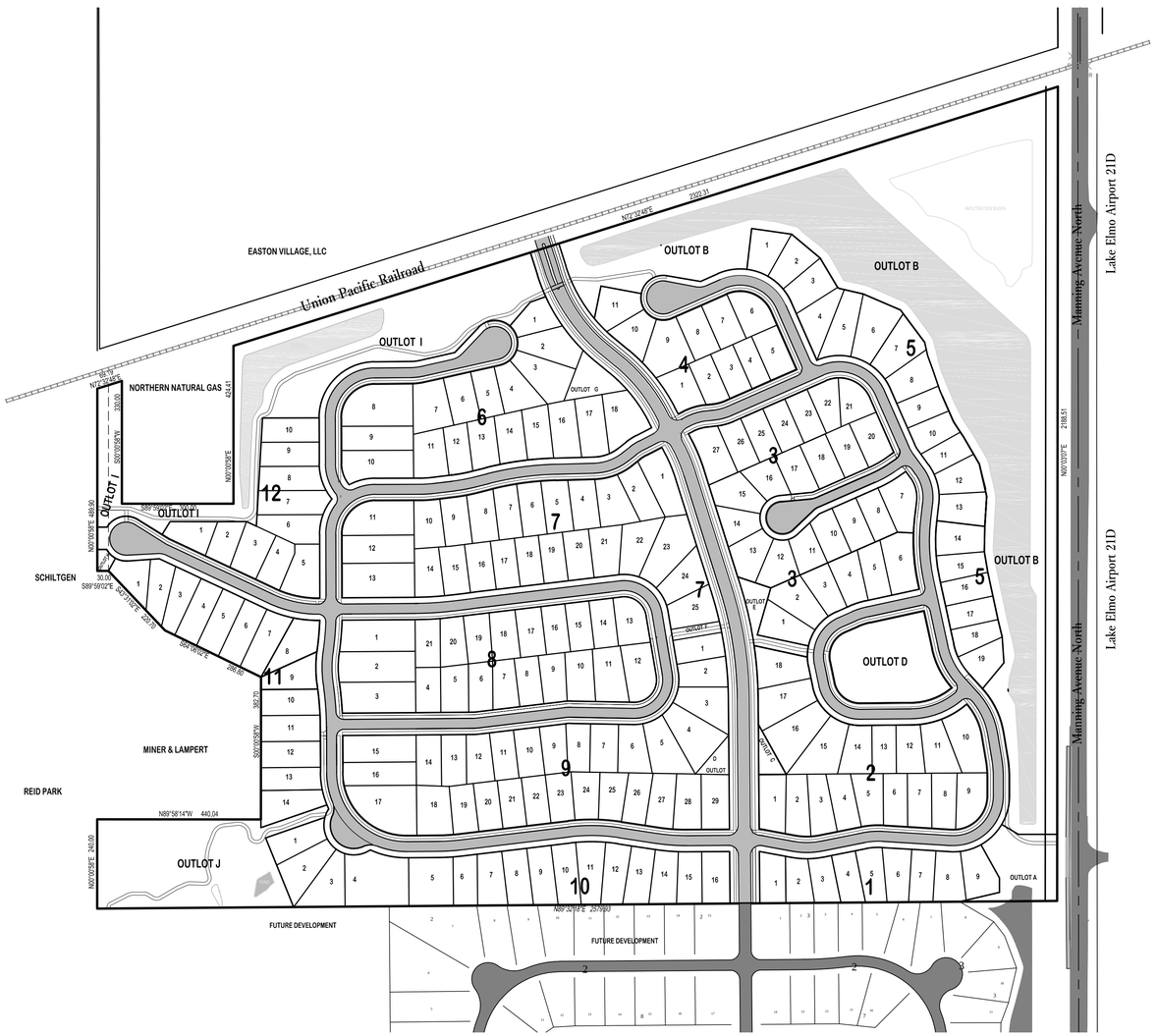

217 UNIT SINGLE FAMILY RESIDENTIAL SUBDIVISION

1ST ADDITION REVISIONS - 10/28/15
Raised Road Up Between Blocks 9 and 10

2ND AND 3RD ADDITION REVISIONS - 4/28/17
Lot reconfigurations (Blocks 3, 4, 5, 6, 7 & 8)

Right of Way reconfiguration

Profile Changes for Alignments 1, 4, 5, 6 & 7

Grading Changes for Pond B10 (NW Corner)

Grading Changes for Pads in Blocks 3, 4, 5, 6 7,8 & 12

Revision to Gas Crossing for Pond B10

Storm Pipe Routing and Structure Changes for Structures: 64-70, 84-105, 109-118, 125-138 & 151-158

Sanitary Sewer Pipe Routing and Structure Changes for Structures: 29-31A, 29-34, 48-55, 56-62, 63-67 & 68-74

N

200 0 200 400 600 FEET

GRAPHIC SCALE

Site Location Map

Section 12 & 13, T29N - R21W
Washington County, Minnesota

PLAN SHEET INDEX:

SHEET NO.	SHEET ID	DESCRIPTION
1	C1	TITLE SHEET
2	C2	EXISTING CONDITIONS
3	C3	EXISTING CONDITIONS
4	C4	EXISTING CONDITIONS
5	C5	OVERALL SITE & AREA CALCULATIONS
6	C6	PRELIMINARY LAYOUT PLAN
7	C7	PRELIMINARY LAYOUT PLAN
8	C8	PRELIMINARY LAYOUT PLAN
9	C9	STREET PLAN
10	C10	STREET PLAN
11	C11	STREET PROFILES
12	C12	STREET PROFILES
13	C13	STREET PROFILES
14	C14	EROSION CONTROL PLAN
15	C15	EROSION CONTROL PLAN
16	C16	EROSION CONTROL PLAN
17	C17	GRADING PLAN
18	C18	GRADING PLAN
19	C19	GRADING PLAN
20	C20	GRADING PLAN
21	C21	GRADING PLAN
22	C22	GRADING PLAN
23	C23	GRADING PLAN
24	C24	UTILITY PLAN
25	C25	UTILITY PLAN
26	C26	UTILITY PLAN
27	C27	UTILITY PLAN
28	C28	UTILITY PLAN
29	C29	UTILITY PLAN
30	C30	DETAILS
31	C31	DETAILS
32	C32	DETAILS
33	C33	DETAILS

1	TS	TREE SURVEY/REPLACEMENT CALCULATION

1	L1	LANDSCAPE TITLE SHEET
2	L2	EAST LANDSCAPE PLAN
3	L3	WEST LANDSCAPE PLAN
4	L4	INFILTRATION BASIN DETAIL
5	L5	ENTRANCE DETAIL
6	L6	LANDSCAPE DETAILS

NOTE: ALL CONSTRUCTION SHALL COMFORM TO THE STANDARDS OF THE CITY OF LAKE ELMO

ERICKSON CIVIL
333 North Main Street, Suite 201
Stillwater, Minnesota 55082
Phone (612) 309-3804
www.ericksoncivilsite.com

DRAWING PHASE:

	OWNER REVIEW
✓	AGENCY REVIEW
	BID DOCUMENT
	FOR CONSTRUCTION
	AS-BUILT DOCUMENT

I HEREBY CERTIFY THAT THIS PLAN, SPECIFICATION OR REPORT WAS PREPARED BY ME OR UNDER MY DIRECT SUPERVISION AND THAT I AM A DULY LICENSED PROFESSIONAL ENGINEER UNDER THE LAWS OF THE STATE OF MINNESOTA.

TODD A. ERICKSON, PE
LICENSE NO. 40418
DATE: 03/16/2015

OWNER/DEVELOPER
EASTON VILLAGE, LLC
2140 COUNTY ROAD 42 WEST
BURNSVILLE, MN 55337

PROJECT TITLE
EASTON VILLAGE
PRELIMINARY PLAT
LAKE ELMO, MINNESOTA

NO.	REVISION DESCRIPTION	DATE
1	Grade Revisions to Street, Blocks 9/10	10/28/15
2	2nd and 3rd Addition Revision	4/28/17

JOB NO. 13-114
DRAWN BY: TAE, JSR
CHECKED BY: TAE

SHEET TITLE
TITLE SHEET

SHEET NO.
C1

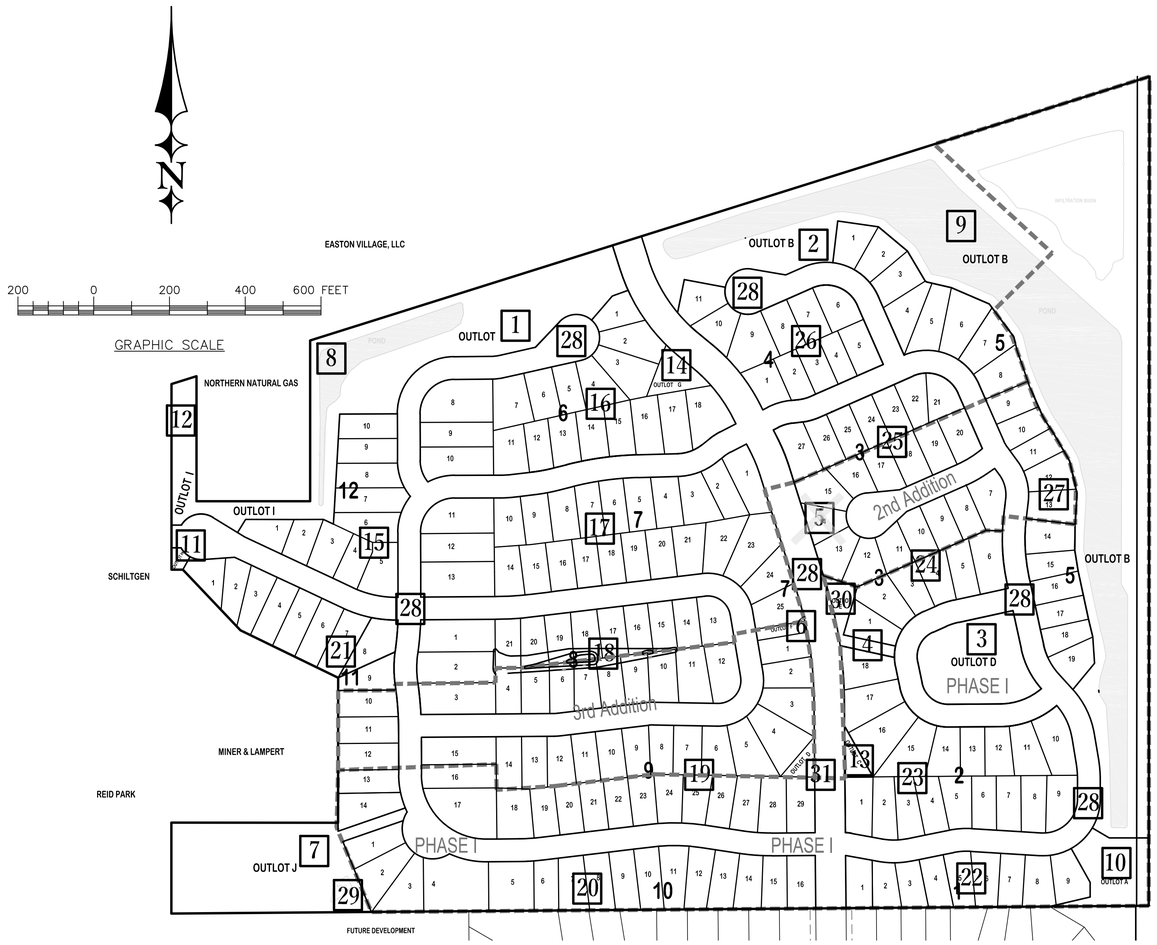

LEGEND

———	PROPERTY BOUNDARY
21	AREA ID
- - - - - -	PHASE I (FINAL PLAT 2015)
	PARK AREAS

PARCEL INFO

1) PARCEL COMPRISES OF THE FOLLOWING PID NUMBERS: 13.029.21.14.0002, 13.029.21.41.0001, 13.029.21.42.0001

2) EXISTING ZONING: RT - RURAL TRANSITIONAL ZONING

3) COMPREHENSIVE PLAN: VILLAGE URBAN LOW DENSITY RESIDENTIAL (1.5 - 2.5 UNITS PER ACRE)

4) PROPOSED ZONING: LDR URBAN LOW DENSITY RESIDENTIAL

DEVELOPMENT STANDARDS

FRONT SETBACK	25'
GARAGE SIDE SETBACK	5'
SIDE SETBACK (CORNER LOTS)	15'
HOUSE SIDE SETBACK	10'
REAR SETBACK	20'
TYPICAL LOT WIDTH:	65'
TYPICAL LOT DEPTH:	130'
SIDE YARD EASEMENT:	5' *
FRONT AND REAR EASEMENT:	10' *
MINIMUM LOT SIZE:	8,100 SQ. FT.
AVERAGE LOT SIZE:	10,486 SQ. FT.
MIN. BASEMENT ELEVATION ABOVE 100 YEAR HWL:	2'

* UNLESS SHOWN ON PRELIMINARY LAYOUT

NOTE: DRAINAGE AND UTILITY EASEMENTS SHOWN FOR 100-YEAR HWL OF PONDING AREAS

OUTLOT TABLE:

NAME		USE	OWNERSHIP	SIZE (ACRES)
OUTLOT	A	OPEN SPACE / POND	CITY	0.76
OUTLOT	B	OPEN SPACE / PARK / POND	CITY	16.78
OUTLOT	C	OPEN SPACE	CITY	0.11
OUTLOT	D	PARK	CITY	1.36
OUTLOT	E	OPEN SPACE / PARK	CITY	0.26
OUTLOT	F	PARK	CITY	0.07
OUTLOT	G	OPEN SPACE	CITY	0.25
OUTLOT	H	PARK	CITY	0.11
OUTLOT	I	OPEN SPACE / PARK / POND	CITY	4.94
OUTLOT	J	OPEN SPACE	CITY	0.05
OUTLOT	K	PARK / EXTENSION OF REID PARK	CITY	2.75
				27.44

AREA CALCULATION:

	Area ID	Block or Outlot	Square Feet	Acres	
PARK AREA	Park Area 1	Part of Outlot I	99,516	2.28	
	Park Area 2	Part of Outlot B	36,361	0.83	
	Park Area 3	Outlot D	59,197	1.36	
	Park Area 4	Part of Outlot E	4,501	0.10	
	Park Area 5 6	Outlot F	3,971 ~~3,084~~	0.07 ~~0.09~~	
	~~Park Area 6~~	~~Outlot H~~	~~4,733~~	~~0.11~~	
	Park Area 7	Part of Outlot K	110,171	2.53	
	Subtotal			**7.29** ~~7.19~~	
OPEN SPACE	Open Space 8	Part of Outlot I	94,368	2.17	
	Open Space 9	Part of Outlot B	694,682	15.95	
	Open Space 10	Outlot A	33,032	0.76	
	Open Space 11	Outlot J	2,170	0.05	
	Open Space 12	Part of Outlot I	21,095	0.48	
	Open Space 13	Outlot C	4,998	0.11	
	Open Space 14	Outlot G	11,014	0.25	
	Open Space 29	Part of Outlot K	9,586	0.22	
	Open Space 30	Part of Outlot E	6,680	0.15	
	Open Space 31	Outlot D	4,814	0.11 (ADDED 4/28/17)	
	Subtotal			~~20.01~~ **20.12**	
LOT AREA	Lot Area 15	Block 13	100,843	2.32	
	Lot Area 16	Block 7	220,695	5.07	
	Lot Area 17	Block 8	296,096	6.80	
	Lot Area 18	Block 9	205,881	4.73	
	Lot Area 19	Block 10	289,229	6.64	
	Lot Area 20	Block 11	186,838	4.29	
	Lot Area 21	Block 12	150,123	3.45	
	Lot Area 22	Block 1	84,473	1.94	
	Lot Area 23	Block 2	200,385	4.60	
	Lot Area 24	Block 3	128,972	2.96	
	Lot Area 25	Block 4	122,141	2.80	
	Lot Area 26	Block 5	106,763	2.45	
	Lot Area 27	Block 6	183,205	4.21	
	Subtotal			~~52.24~~ **52.42**	
RIGHT OF WAY	Right of Way Area 28		**812,117** ~~824,425~~	~~18.93~~ **18.64**	
	Subtotal			~~18.93~~ **18.64**	

AREA CALCULATION SUMMARY

	Acres
PARK AREA	~~7.29~~ **7.19**
OPEN SPACE	~~20.01~~ **20.12**
LOT AREA	~~52.24~~ **52.42**
RIGHT OF WAY	~~18.93~~ **18.64**
RUNWAY PROTECTION ZONE	**4.77**
STEEP SLOPE AREAS	**2.65**
TOTAL PROPERTY AREA	**98.47**
TOTAL PROPOSED LOTS	**217**
PERCENT OF OPEN SPACE/PARK	**27.7%**
GROSS DENSITY	**2.20**

ERICKSON CIVIL
333 North Main Street, Suite 201
Stillwater, Minnesota 55082
Phone (612) 309-3804
www.ericksoncivilsite.com

DRAWING PHASE:
- OWNER REVIEW
- ✓ AGENCY REVIEW
- BID DOCUMENT
- FOR CONSTRUCTION
- AS-BUILT DOCUMENT

I HEREBY CERTIFY THAT THIS PLAN, SPECIFICATION OR REPORT WAS PREPARED BY ME OR UNDER MY DIRECT SUPERVISION AND THAT I AM A DULY LICENSED PROFESSIONAL ENGINEER UNDER THE LAWS OF THE STATE OF MINNESOTA.

TODD A. ERICKSON, PE
LICENSE NO. 40418
DATE: 03/16/2015

OWNER/DEVELOPER
EASTON VILLAGE, LLC
2140 COUNTY ROAD 42 WEST
BURNSVILLE, MN 55337

PROJECT TITLE
EASTON VILLAGE
PRELIMINARY PLAT
LAKE ELMO, MINNESOTA

NO.	REVISION DESCRIPTION	DATE
1	2nd and 3rd Addition Revison	4/28/17

JOB NO. 13-114
DRAWN BY: TAE, JSR
CHECKED BY: TAE

SHEET TITLE
PRELIMINARY SITE PLAN

SHEET NO.
C5
SHEET 5 of 33

May 30, 2017

Tom Wolter
Easton Village, LLC
2140 County Road 42
Burnsville, MN 55337

Re: Easton Village 2nd and 3rd Additions—Lake Elmo, Minnesota
VBWD Permit #2017-12

Dear Mr. Wolter:

Enclosed is the Valley Branch Watershed District (VBWD) permit for your project. Please note the following conditions imposed by the Managers, which are also listed on the back of the permit.

1. All the conditions of Permit 2015-15 apply to this permit.
2. The plans shall be corrected to show the Elevation 922 contour on the 2nd Addition plans.
3. The plans shall be updated to show all the EOFs for low points in roads.
4. The BFE of Block 8, Lot 21 shall be raised to Elevation 919.0.

Thank you for your cooperation with the District's permit program.

Sincerely,

David J. Bucheck, President
Valley Branch Watershed District

DJB/ymh
Enclosure
c: Susannah Torseth, VBWD Attorney
Jenifer Sorensen, MDNR
Jeffrey Brower, VBWD District Inspector
Stephen Wensman, City Planning Director—City of Lake Elmo
Jack Griffin, City Engineer, FOCUS Engineering—City of Lake Elmo
Mike Bent, Building Official—City of Lake Elmo
Todd Erickson, Erickson Civil—Authorized Agent
Karen Wold, Barr Engineering Co.
Yvonne Huffman, Barr Engineering Co.

\\barr.com\projects\Mpls\23 MN\82\2382020_MovedFromMpls_P\2017\2017-12_EastonVillagePhase3\PermitLtr_2017-12_EastonVillate2nd-3rd_May2017.docx

VALLEY BRANCH WATERSHED DISTRICT
PERMIT APPLICATION

TO BE COMPLETED BY VBWD:
Permit Number 2017-12
Permit Fee Received $2,000
Date Received March 22, 2017

Return application to
John Hanson
Barr Engineering Co.
Engineers for the Valley Branch Watershed District
4300 MarketPointe Drive
Bloomington, MN 55435

A permit fee shall accompany this permit, unless waived by the Board of Managers. (Governmental bodies are not required to pay a fee.)

Project Information			
Project Name	Easton Village 2nd and 3rd Additions		
Location (street address, if known; otherwise major intersection)	32nd St. N & Linden Avenue N.		
City or Township	Lake Elmo		
Parcel Identification Number (if known)	13.029.21.42.0025		
Section, Township, Range (if known)	Section:	Township: 29	Range: 21
Project Timeline Estimate 3 Months	Start: May 2017	Complete: August 2017	

Project Contacts

	Applicant	Authorized Agent	Owner (if different than applicant)
Name	Tom Wolter	Todd Erickson	
Company (if applicable)	Easton Village, LLC	EricksonCivil	
Address	2140 County Road 42	333 N. Main St. Suite 201	
City, State, Zip	Burnsville, MN 55337	Stillwater, MN 55082	
Phone	952-898-5600	612-309-3804	
Email	timbercrest@ymail.com	todd@tericksonllc.com	

Once a Valley Branch Watershed District permit has been approved, the permit conditions will be attached to the back of this form.

By signing this permit application, the permit applicant, his/her agent, and owner (hereinafter "Permittee") shall abide by all the conditions set by the Valley Branch Watershed District (VBWD). All work which violates the terms of the permit by reason of presenting a serious threat of soil erosion, sedimentation, or an adverse effect upon water quality or quantity, or violating any rule of the VBWD may result in the VBWD issuing a Stop Work Order, which shall immediately cause the work on the project related to the permit to cease and desist. All work on the project shall cease until the permit conditions are met and approved by the VBWD representatives. In the event Permittee contests the Stop Work Order issued by the VBWD, Permittee shall attend a VBWD Board of Managers meeting and discuss the project. Any attorney fees, costs, or other expenses incurred on behalf of the VBWD in enforcing the terms of the permit shall be the sole expense of the permit applicant. Costs shall be payable from the permit applicant's permit fee. If said fees exceed the permit amount, the Permittee shall have ten (10) days from the date of receipt of the invoice from the VBWD to pay for the cost incurred in enforcing the permit, by which to pay the VBWD for said costs. If costs are not paid within the ten (10) days, the VBWD will draw on the permit applicant's surety. The Permittee agrees to be bound by the terms of the final permit and conditions required by the VBWD for approval of the permit. The permit applicant further acknowledges that he/she has the authority to bind the owner of the property and/or any entity performing the work on the property pursuant to the terms of the VBWD permit, and shall be responsible for complying with the terms of the VBWD permit.

Signatures (Required):

	Applicant	Authorized Agent	Owner (if different than applicant)
Signature	Tom Wolter	T. Erickson	
Date	03/22/2017	03/22/2017	

1. All the conditions of Permit 2015-15 apply to this permit.
2. The plans shall be corrected to show the Elevation 922 contour on the 2nd Addition plans.
3. The plans shall be updated to show all the EOFs for low points in roads.
4. The BFE of Block 8, Lot 21 shall be raised to Elevation 919.0.

Approved: _____ **May 11, 2017** _____ President

Signature *Title*

Valley Branch Watershed District

Note: The grant of this permit in no way purports to permit acts, which may be prohibited by other governmental agencies.

CITY OF LAKE ELMO
WASHINGTON COUNTY
STATE OF MINNESOTA

RESOLUTION NO. 2017-076

A RESOLUTION APPROVING A FINAL PLAT FOR EASTON VILLAGE 3RD ADDITION

WHEREAS, the City of Lake Elmo is a municipal corporation organized and existing under the laws of the State of Minnesota; and

WHEREAS, Chase Development, 2140 West County Road 42, Burnsville, MN has submitted an application to the City of Lake Elmo ("City") for a Final Plat for Easton Village 3rd Addition Final Plat, a copy of which is on file in the City of Lake Elmo Planning Department; and

WHEREAS, the Easton Village Sketch Plan was reviewed by the Planning Commission on January 7, 2014 and approved by City Council on February 5, 2014; and

WHEREAS, the City approved the Easton Village Preliminary Plat subject to 21 conditions; and

WHEREAS, the proposed Easton Village 3rd Addition includes 28 single family residential lots within the Easton Village 217 unit residential development; and

WHEREAS, the Lake Elmo Planning Commission reviewed the Easton Village 2nd Addition Final plat at its July 10, 2017 meeting; and

WHEREAS, the Lake Elmo Planning Commission adopted a motion recommending approval of the Final Plat subject to 10 conditions of approval; and

WHEREAS, the Lake Elmo Planning Commission has submitted its report and recommendation concerning the Final Plat as part of a memorandum to the City Council for its July 18, 2017 meeting; and

WHEREAS, the City Council reviewed the Easton Village 3rd Addition Final Plat at its meeting held on July 18, 2017 and made the following findings:

1) That all the requirements of City Code Section 153.07 related to the Final Plan and Final Plat have been met by the Applicant.

2) That the proposed Final Plat for Easton Village consists of the creation of 28 single-family detached residential structures.

3) That the Easton Village 3rd Addition Final Plat is generally consistent with the Preliminary Plat and Plans as approved by the City of Lake Elmo on July 15, 2014 and as amended and approved on June 21, 2017.

4) That the Easton Village 3rd Addition Final Plat is consistent with the Lake Elmo Comprehensive Plan and the Future Land Use Map for this area.

5) That the Easton Village 3rd Addition Final Plat complies with the City's Urban Low Density Residential zoning district regulations.

6) That the Easton Village 3rd Addition Final Plat complies with all other applicable zoning requirements, including the City's landscaping, storm water, sediment and erosion control and other ordinances with the exception of issues identified in the July 10, 2017 Staff report to the Planning Commission.

7) That the Easton Village 3rd Addition Final Plat complies with the City's subdivision ordinance.

8) That the Easton Village 3rd Addition Final Plat is generally consistent with the City's engineering standards with the exception of necessary plan revisions outlined by the City Engineer in his review comments to the City dated May 25, 2017.

NOW, THEREFORE, BE IT RESOLVED THAT the City Council does hereby approve the Easton Village 3rd Addition Final Plat subject to the following conditions:

1) Final grading, drainage, and erosion control plans, sanitary and storm water management plans, landscape plans, and street and utility construction plans shall be reviewed and approved by the City Engineer and applicable Staff prior to the recording of the Final Plat. All changes and modifications to the plans requested by the City Engineer in the memorandums addressing Easton Village 3rd Addition Final Plat and Easton Village 3rd Addition Construction Plan Review dated May 25, 2017 in the memo shall be incorporated into these documents before they are approved.

2) Prior to the execution of the Final Plat by City officials, the Developer shall enter into a Developer's Agreement acceptable to the City Attorney and approved by the City Council that delineates who is responsible for the design, construction, and payment of the required improvements for the Easton Village 3rd Addition Final Plat with financial guarantees therefore.

3) All easements as requested by the City Engineer and Public Works Department shall be documented on the Final Plat prior to its execution by City Officials.

4) The Applicant shall submit an updated Landscape Plan that is consistent with Preliminary Landscape Plans. The updated plans will need to be approved by the City.

5) A Landscape License Agreement shall be executed for the maintenance of commonly held HOA and City outlots and right-of-ways prior to release of the final plat by City Officials.

6) A temporary easement for the temporary cul-de-sac connecting 33rd Street North to Village Parkway shall be fully executed on the City standard easement agreement form.

7) The applicant shall provide a disclosure statement to all first homeowners in the development advising of the airport and associated over-flights.

8) All builders shall be encouraged to incorporate interior noise reduction measures into single family residential structures within the subdivision based on the Metropolitan Council's Builder Guide.

9) The developer shall abide by any conditions of approval as listed in permits issued by Northern Natural Gas to perform construction work over the gas line that runs from north to south across this site.

10) All title work must be submitted and accepted prior to recording of Final Plat.

Passed and duly adopted this 18th day of July, 2017 by the City Council of the City of Lake Elmo, Minnesota.

_____
Mike Pearson, Mayor

ATTEST:

_____
Julie Johnson, City Clerk